# VILLAGE OF DOWNERS GROVE
**Report for the Village**
**7/11/2017**

| SUBJECT: | SUBMITTED BY: |
|---|---|
| Bid - 2017 Street Resurfacing Contract B | Nan Newlon<br>Director of Public Works |

## SYNOPSIS

A motion is requested to award a contract for the 2017 Street Resurfacing Contract B to Geneva Construction Company of Aurora, Illinois in the amount of $1,797,020.84.

## STRATEGIC PLAN ALIGNMENT

The goals for 2015-2017 include *Top Quality Infrastructure*.

## FISCAL IMPACT

The FY17 budget includes a total of $1,800,000 for this contract: $1,195,000 in the Motor Fuel Tax Fund (Page 4-6, Line 20), and $605,000 in the Capital Fund (Page 4-18, Line 18).

## RECOMMENDATION

Approval on the July 18, 2017 consent agenda.

## BACKGROUND

This contract is a component of the 2017 Roadway Maintenance Program (CIP Project ST-004). The scope of this contract includes resurfacing the streets included on the attached list with a new layer of asphalt along with the repair of defective sections of pavement and concrete curb and gutter.

This contract represents a portion of the budgeted roadway maintenance work. Other projects include Crack Sealing and Seal Coating Services, 2017 Resurfacing (A) and 2017 Fall Roadway Patching.

A Call for Bids was issued and published in accordance with the Village's Purchasing Policy. Three bids were received by the due date of June 21, 2017. A synopsis of the bids is as follows:

| Contractor | Base Bid | |
|---|---|---|
| **Geneva Construction Co.** | **$1,797,020.84** | **Low Bid** |
| J. A. Johnson Paving Co. | $1,841,148.00 | |
| K-Five Construction Corp | $2,094,930.85 | |

Geneva Construction Company satisfactorily completed the Village's 39th Street Resurfacing Project in 2008, the 2010 Resurfacing (A) & (B) Projects, the paving portion of the 2014 Downers Grove Estates / Esterbrook Reconstruction Project, and the 2016 Resurfacing (A) & (B) Projects.

## ATTACHMENTS

Contract Documents
IDOT Form Contractor Certifications
Contractor Evaluation Form
List of Streets

RETURN WITH BID

Illinois Department of Transportation

# Local Public Agency Formal Contract Proposal

| PROPOSAL SUBMITTED BY |
|---|
| GENEVA CONSTRUCTION CO. |
| Contractor's Name |
| P.O. BOX 998 |
| Street P.O. Box |
| AURORA, IL 60507-0998 |
| City State Zip Code |

STATE OF ILLINOIS

COUNTY OF DuPage

Village of Downers Grove

(Name of City, Village, Town or Road District)

FOR THE IMPROVEMENT OF

STREET NAME OR ROUTE NO. Various Locations

SECTION NO. 17-00000-01-GM

TYPES OF FUNDS MFT & Corporate

☒ SPECIFICATIONS (required) ☐ PLANS (required)

**For Municipal Projects**

Submitted/Approved/Passed

☒ Mayor ☐ President of Board of Trustees ☐ Municipal Official

5/31/17

Date

**Department of Transportation**

☒ Released for bid based on limited review

IMS

Regional Engineer

6/2/17

Date

**For County and Road District Projects**

Submitted/Approved

Highway Commissioner

Date

Submitted/Approved

County Engineer/Superintendent of Highways

Date

JOHN M. WELCH 062-052836 REGISTERED PROFESSIONAL ENGINEER STATE OF ILLINOIS

LIC EXP 11/30/17

Note: All proposal documents, including Proposal Guaranty Checks or Proposal Bid Bonds, should be stapled together to prevent loss when bids are processed.

RETURN WITH BID

# NOTICE TO BIDDERS

County DuPage
Local Public Agency Downers Grove
Section Number 17-00000-01-GM
Route Various

Sealed proposals for the improvement described below will be received at the office of Public Works Department, 5101 Walnut Avenue, Downers Grove, Illinois 60515 (Address) until 10:00 AM (Time) on June 21, 2017 (Date)

Sealed proposals will be opened and read publicly at the office of Public Works Department 5101 Walnut Avenue, Downers Grove, Illinois 60515 (Address) at 10:00 AM (Time) on June 21, 2017 (Date)

DESCRIPTION OF WORK

Name 2017 Resurfacing (B) Length: 16748.00 feet ( 3.17 miles)
Location Various Streets
Proposed Improvement Pavement removal and replacement, level binder, hot-mix asphalt surface course, curb and gutter removal and replacement and all related work

1. Plans and proposal forms will be available in the office of Public Works Department, 5101 Walnut Avenue, Downers Grove, Illinois 60515, Scott Barr (630) 434-5488, Proposal Fee $0 (Address)

2. ☒ Prequalification
   If checked, the 2 low bidders must file within 24 hours after the letting an "Affidavit of Availability" (Form BC 57), in duplicate, showing all uncompleted contracts awarded to them and all low bids pending award for Federal, State, County, Municipal and private work. One original shall be filed with the Awarding Authority and one original with the IDOT District Office.

3. The Awarding Authority reserves the right to waive technicalities and to reject any or all proposals as provided in BLRS Special Provision for Bidding Requirements and Conditions for Contract Proposals.

4. The following BLR Forms shall be returned by the bidder to the Awarding Authority:
   a. BLR 12200: Local Public Agency Formal Contract Proposal
   b. BLR 12200a Schedule of Prices
   c. BLR 12230: Proposal Bid Bond (if applicable)
   d. BLR 12325: Apprenticeship or Training Program Certification (**do not use for federally funded projects**)
   e. BLR 12326: Affidavit of Illinois Business Office

5. The quantities appearing in the bid schedule are approximate and are prepared for the comparison of bids. Payment to the Contractor will be made only for the actual quantities of work performed and accepted or materials furnished according to the contract. The scheduled quantities of work to be done and materials to be furnished may be increased, decreased or omitted as hereinafter provided.

6. Submission of a bid shall be conclusive assurance and warranty the bidder has examined the plans and understands all requirements for the performance of work. The bidder will be responsible for all errors in the proposal resulting from failure or neglect to conduct an in depth examination. The Awarding Authority will, in no case be responsible for any costs, expenses, losses or changes in anticipated profits resulting from such failure or neglect of the bidder.

7. The bidder shall take no advantage of any error or omission in the proposal and advertised contract.

8. If a special envelope is supplied by the Awarding Authority, each proposal should be submitted in that envelope furnished by the Awarding Agency and the blank spaces on the envelope shall be filled in correctly to clearly indicate its contents. When an envelope other than the special one furnished by the Awarding Authority is used, it shall be marked to clearly indicate its contents. When sent by mail, the sealed proposal shall be addressed to the Awarding Authority at the address and in care of the official in whose office the bids are to be received. All proposals shall be filed prior to the time and at the place specified in the Notice to Bidders. Proposals received after the time specified will be returned to the bidder unopened.

9. Permission will be given to a bidder to withdraw a proposal if the bidder makes the request in writing or in person before the time for opening proposals.

RETURN WITH BID

# PROPOSAL

County DuPage
Local Public Agency Downers Grove
Section Number 17-00000-01-GM
Route Various

1. Proposal of **GENEVA CONSTRUCTION CO.**

for the improvement of the above section by the construction of Pavement removal and replacement, level binder, hot-mix asphalt surface course, curb and gutter removal and replacement and all related work

a total distance of 16748.00 feet, of which a distance of 16748.00 feet, ( 3.172 miles) are to be improved.

2. The plans for the proposed work are those prepared by Village of Downers Grove and approved by the Department of Transportation on _____

3. The specifications referred to herein are those prepared by the Department of Transportation and designated as "Standard Specifications for Road and Bridge Construction" and the "Supplemental Specifications and Recurring Special Provisions" thereto, adopted and in effect on the date of invitation for bids.

4. The undersigned agrees to accept, as part of the contract, the applicable Special Provisions indicated on the "Check Sheet for Recurring Special Provisions" contained in this proposal.

5. The undersigned agrees to complete the work within _____ working days or by 11/10/2017 unless additional time is granted in accordance with the specifications.

6. A proposal guaranty in the proper amount, as specified in BLRS Special Provision for Bidding Requirements and Conditions for Contract Proposals, will be required. Bid Bonds will be allowed as a proposal guaranty. Accompanying this proposal is either a bid bond if allowed, on Department form BLR 12230 or a proposal guaranty check, complying with the specifications, made payable to:

Village of Downers Grove Treasurer of _____

The amount of the check is Bid Bond ( 5% ).

7. In the event that one proposal guaranty check is intended to cover two or more proposals, the amount must be equal to the sum of the proposal guaranties, which would be required for each individual proposal. If the proposal guaranty check is placed in another proposal, it will be found in the proposal for: Section Number _____.

8. The successful bidder at the time of execution of the contract will be required to deposit a contract bond for the full amount of the award. When a contract bond is not required, the proposal guaranty check will be held in lieu thereof. If this proposal is accepted and the undersigned fails to execute a contract and contract bond as required, it is hereby agreed that the Bid Bond or check shall be forfeited to the Awarding Authority.

9. Each pay item should have a unit price and a total price. If no total price is shown or if there is a discrepancy between the product of the unit price multiplied by the quantity, the unit price shall govern. If a unit price is omitted, the total price will be divided by the quantity in order to establish a unit price.

10. A bid will be declared unacceptable if neither a unit price nor a total price is shown.

11. The undersigned submits herewith the schedule of prices on BLR 12200a covering the work to be performed under this contract.

12. The undersigned further agrees that if awarded the contract for the sections contained in the combinations on BLR 12200a, the work shall be in accordance with the requirements of each individual proposal for the multiple bid specified in the Schedule for Multiple Bids below.

RETURN WITH BID

Illinois Department of Transportation

# SCHEDULE OF PRICES

County DuPage
Local Public Agency Village of Downers Grove
Section 17-00000-01-GM
Route Various

**Schedule for Multiple Bids**

| Combination Letter | Sections Included in Combinations | Total |
|---|---|---|
| | | |
| | | |
| | | |
| | | |

**Schedule for Single Bid**

(For complete information covering these items, see plans and specifications)

Bidder's Proposal for making Entire Improvements 1,797,020.84

| Item No. | Items | Unit | Quantity | Unit Price | Total |
|---|---|---|---|---|---|
| 1 | Hot-Mix Asphalt Surface Course, Mix D, N50 | Ton | 4,521 | 67.00 | 302,907.00 |
| 2 | Leveling Binder (Machine Method), N50 | Ton | 2,280 | 66.00 | 150,480.00 |
| 3 | Hot-Mix Asphalt Binder Course, IL-19.0, N50 | Ton | 299 | 68.00 | 20,332.00 |
| 4 | Bituminous Materials (Tack Coat) | LB | 35,778 | 0.01 | 357.78 |
| 5 | Class D Patches, Type IV, 4" | S.Y. | 12,331 | 28.00 | 345,268.00 |
| 6 | Class D Patches, 4" Special | S.Y. | 348 | 34.00 | 11,832.00 |
| 7 | Class D Patches, Type IV, 6" | S.Y. | 286 | 40.00 | 11,440.00 |
| 8 | Class D Patches, 6" Special | S.Y. | 50 | 45.00 | 2250.00 |
| 9 | Pavement Removal and Hot-Mix Asphalt Replacement, 8" Special | S.Y. | 40 | 54.00 | 2160.00 |
| 10 | Porous Granular Embankment, Special | C.Y. | 407 | 57.00 | 23,199.00 |
| 11 | Additional Hauling Surcharge, Non-Hazardous Special Waste | Load | 1 | 800.00 | 800.00 |
| 12 | Combination Concrete Curb and Gutter Removal | L.F. | 15,120 | 6.50 | 98,280.00 |
| 13 | Combination Concrete Curb and Gutter, Type M-3.12 | L.F. | 10,559 | 18.75 | 197,981.25 |
| 14 | Combination Concrete Curb and Gutter, Type M-4.12 | L.F. | 165 | 22.00 | 3630.00 |
| 15 | Combination Concrete Curb and Gutter, Type M-6.12 | L.F. | 1,335 | 21.00 | 28,035.00 |
| 16 | Concrete Curb, Type B-6.0 Reinforced | L.F. | 40 | 20.00 | 800.00 |
| 17 | Combination Concrete Curb and Gutter, Type B-6.12 | L.F. | 2,651 | 21.00 | 55,671.00 |

RETURN WITH BID

Bidder's Proposal for making Entire Improvements

| Item No. | Items | Unit | Quantity | Unit Price | Total |
|---|---|---|---|---|---|
| 18 | Combination Concrete Curb and Gutter, Type B-6.12 Reinforced | L.F. | 300 | 26.00 | 7800.00 |
| 19 | Combination Concrete Curb and Gutter, Type B-6.18 | L.F. | 70 | 32.00 | 2240.00 |
| 20 | Manhole to be Adjusted | EA. | 12 | 390.00 | 4680.00 |
| 21 | Manhole to be Adjusted, Special | EA. | 15 | 570.00 | 8550.00 |
| 22 | Manhole to be Adjusted With New Type 1 Frame and Closed Lid | EA. | 1 | 855.00 | 855.00 |
| 23 | Manhole to be Reconstructed | EA. | 1 | 1300.00 | 1300.00 |
| 24 | Inlet to be Adjusted | EA. | 49 | 310.00 | 15,190.00 |
| 25 | Inlet to be Adjusted With New Type 3 Frame and Grate,Special | EA. | 5 | 695.00 | 3475.00 |
| 26 | Inlet to be Reconstructed With New Type 3 Frame and Grate,Special | EA. | 1 | 1865.00 | 1865.00 |
| 27 | Inlet, Type A, 24" With New Type 3 Frame and Grate, Special | EA. | 1 | 2500.00 | 2500.00 |
| 28 | Storm Sewer, Class B, Type 1, 15" | L.F. | 28 | 100.00 | 2800.00 |
| 29 | Inlet Filters | EA. | 63 | 150.00 | 9450.00 |
| 30 | Inlet Filters Cleaning | EA. | 63 | 37.75 | 2378.25 |
| 31 | Hot-Mix Asphalt Surface Removal, 1.75" | S.Y. | 6,510 | 2.29 | 14,907.90 |
| 32 | Hot-Mix Asphalt Surface Removal, 2.0" | S.Y. | 10,512 | 2.55 | 26,805.60 |
| 33 | Hot-Mix Asphalt Surface Removal, 2.5" | S.Y. | 31,206 | 2.70 | 84,256.20 |
| 34 | Hot-Mix Asphalt Surface Removal, 3.0" | S.Y. | 2,638 | 3.75 | 9892.50 |
| 35 | Hot-Mix Asphalt Surface Removal, 4.0" | S.Y. | 2,137 | 4.50 | 9616.50 |
| 36 | Preparation of Aggregate Base | S.Y. | 2,137 | 0.70 | 1495.90 |
| 37 | Aggregate Base Repair | Ton | 40 | 28.00 | 1120.00 |
| 38 | Aggregate for Temporary Access | Ton | 4 | 15.00 | 60.00 |
| 39 | Portland Cement Concrete Sidewalk Removal | S.F. | 13,415 | 1.10 | 14,756.50 |
| 40 | Portland Cement Concrete Sidewalk, 5" | S.F. | 10,635 | 5.85 | 62,214.75 |
| 41 | Portland Cement Concrete Sidewalk, 6" | S.F. | 2,120 | 7.00 | 14,840.00 |
| 42 | Detectable Warnings | S.F. | 500 | 18.00 | 9000.00 |
| 43 | Decorative Paver Driveway Removal and Replacement | S.Y. | 18 | 50.00 | 900.00 |
| 44 | Parkway Restoration | S.Y. | 7,661 | 12.16 | 93,157.76 |
| 45 | Temporary Ramp, Hot-Mix Asphalt | S.Y. | 21 | 25.00 | 525.00 |
| 46 | Tree Root Pruning | EA. | 2 | 150.00 | 300.00 |

RETURN WITH BID

Bidder's Proposal for making Entire Improvements

| Item No. | Items | Unit | Quantity | Unit Price | Total |
|---|---|---|---|---|---|
| 47 | Hot-Mix Asphalt Driveway Removal | S.Y. | 109 | 8.00 | 872.00 |
| 48 | Hot-Mix Asphalt Driveway Pavement, 3" | S.Y. | 109 | 24.00 | 2616.00 |
| 49 | Portland Cement Concrete Driveway Removal | S.Y. | 1,537 | 6.35 | 9759.95 |
| 50 | Portland Cement Concrete Driveway Pavement, 6" | S.Y. | 1,537 | 62.00 | 95,294.00 |
| 51 | Thermoplastic Pavement Marking Line, 6" White | L.F. | 615 | 3.00 | 1845.00 |
| 52 | Thermoplastic Pavement Marking Line, 24" White | L.F. | 87 | 12.00 | 1044.00 |
| 53 | Erosion Barrier, Special | L.F. | 105 | 7.00 | 735.00 |
| 54 | Erosion, Sedimentation and Dust Control | L.S. | 1 | 5000.00 | 5000.00 |
| 55 | Construction Staking | L.S. | 1 | 2500.00 | 2500.00 |
| 56 | Traffic Control, Maintenance of Traffic | L.S. | 1 | 15,000.00 | 15,000.00 |
| | | | | | |
| | | | | | |
| | | | | | |
| | | | | | |
| | | | | | |
| | | | | | |
| | | | | | |
| | | | | | |
| | | | | | |
| | | | | | |

RETURN WITH BID

## CONTRACTOR CERTIFICATIONS

County DuPage
Local Public Agency Downers Grove
Section Number 17-00000-01-GM
Route Various

The certifications hereinafter made by the bidder are each a material representation of fact upon which reliance is placed should the Department enter into the contract with the bidder.

1. **Debt Deliquency.** The bidder or contractor or subcontractor, respectively, certifies that it is not delinquent in the payment of any tax administered by the Department of Revenue unless the individual or other entity is contesting, in accordance with the procedures established by the appropriate revenue Act, its liability for the tax or the amount of tax. Making a false statement voids the contract and allows the Department to recover all amounts paid to the individual or entity under the contract in a civil action.

2. **Bid-Rigging or Bid Rotating.** The bidder or contractor or subcontractor, respectively, certifies that it is not barred from contracting with the Department by reason of a violation of either 720 ILCS 5/33E-3 or 720 ILCS 5/33E-4.

   A violation of Section 33E-3 would be represented by a conviction of the crime of bid-rigging which, in addition to Class 3 felony sentencing, provides that any person convicted of this offense or any similar offense of any state or the United States which contains the same elements as this offense shall be barred for 5 years from the date of conviction from contracting with any unit of State or local government. No corporation shall be barred from contracting with any unit of State or local government as a result of a conviction under this Section of any employee or agent of such corporation if the employee so convicted is no longer employed by the corporation and: (1) it has been finally adjudicated not guilty or (2) if it demonstrates to the governmental entity with which it seeks to contract and that entity finds that the commission of the offense was neither authorized, requested, commanded, nor performed by a director, officer or a high managerial agent in behalf of the corporation.

   A violation of Section 33E-4 would be represented by a conviction of the crime of bid-rotating which, in addition to Class 2 felony sentencing, provides that any person convicted of this offense or any similar offense of any state or the United States which contains the same elements as this offense shall be permanently barred from contracting with any unit of State or local government. No corporation shall be barred from contracting with any unit of State or local government as a result of a conviction under this Section of any employee or agent of such corporation if the employee so convicted is no longer employed by the corporation and: (1) it has been finally adjudicated not guilty or (2) if it demonstrates to the governmental entity with which it seeks to contract and that entity finds that the commission of the offense was neither authorized, requested, commanded, nor performed by a director, officer or a high managerial agent in behalf of the corporation.

3. **Bribery.** The bidder or contractor or subcontractor, respectively, certifies that it has not been convicted of bribery or attempting to bribe an officer or employee of the State of Illinois or any unit of local government, nor has the firm made an admission of guilt of such conduct which is a matter of record, nor has an official, agent, or employee of the firm committed bribery or attempted bribery on behalf of the firm and pursuant to the direction or authorization of a responsible official of the firm.

4. **Interim Suspension or Suspension.** The bidder or contractor or subcontractor, respectively, certifies that it is not currently under a suspension as defined in Subpart I of Title 44 Subtitle A Chapter III Part 6 of the Illinois Administrative Code. Furthermore, if suspended prior to completion of this work, the contract or contracts executed for the completion of this work may be cancelled.

RETURN WITH BID

County DuPage
Local Public Agency Downers Grove
Section Number 17-00000-01-GM
Route Various

## SIGNATURES

(If an individual)

Signature of Bidder _____

Business Address _____

(If a partnership)

Firm Name _____

Signed By _____

Business Address _____

Inset Names and Addressed of All Partners _____

(If a corporation)

Corporate Name GENEVA CONSTRUCTION CO.

Signed By CASS W. PRICE, VICE PRESIDENT
President

Business Address P.O. BOX 998
AURORA, IL 60507-0998

Insert Names of Officers
President John P. Bryan
Secretary Michael P. Bryan
Treasurer John Miller

Attest: _____
~~Secretary~~ Treasurer

# INDEX OF LOCAL AGENCY SPECIAL PROVISIONS


| TITLE | SP # |
|---|---|
| GENERAL CONSTRUCTION REQUIREMENTS | 1 |
| PRE-QUALIFICATION | 2 |
| COMPLETION TIME | 3 |
| LIQUIDATED DAMAGES | 4 |
| ACCESS AND WATER SHUT OFF NOTIFICATION | 5 |
| TREE PROTECTION | 6 |
| CLEANING UP | 7 |
| EXISTING UTILITIES | 8 |
| CLASS D PATCHES, 4" & 6" | 9 |
| PAVEMENT REMOVAL & HMA REPLACEMENT, 8" SPECIAL | 10 |
| COMBINATION CONCRETE CURB AND GUTTER REMOVAL | 11 |
| COMBINATION CONCRETE CURB AND GUTTER OF TYPE SPECIFIED | 12 |
| POROUS GRANULAR EMBANKMENT, SPECIAL | 13 |
| MANHOLES OR INLETS, TO BE ADJUSTED OR RECONSTRUCTED | 14 |
| TREE ROOT PRUING | 15 |
| PORTLAND CEMENT CONCRETE SIDEWALK | 16 |
| PARKWAY RESTORATION | 17 |
| HOT-MIX ASPHALT DRIVEWAY | 18 |
| PORTLAND CEMENT CONCRETE DRIVEWAY | 19 |
| TEMPORARY RAMP, HMA | 20 |
| DECORATIVE PAVER DRIVEWAY REMOVAL & REPLACEMENT | 21 |
| CONSTRUCTION STAKING | 22 |
| MANHOLE AND INLET CONSTRUCTION | 23 |
| SELECTED GRANULAR BACKFILL | 24 |
| STORM SEWER (CLASS, TYPE, SIZE SPECIFIED) | 25 |
| PREPARATION OF AGGREGATE BASE | 26 |
| AGGREGATE FOR TEMPORARY ACCESS | 27 |
| EROSION, SEDIMENTATION AND DUST CONTROL | 28 |
| TRAFFIC CONTROL, MAINTENANCE OF TRAFFIC | 29 |
| HOT-MIX ASPHALT BINDER AND SURFACE COURSE | 30 |
| IEPA CLEAN CONTRUCTION OR DEMOLITION DEBRIS | 31 |

Illinois Department of Transportation

## Special Provisions

The following Special Provisions supplement the "Standard Specifications for Road and Bridge Construction", Adopted April 1, 2016, the latest edition of the "Manual on Uniform Traffic Control Devices for Streets and Highways", and the "Manual of Test Procedures of Materials" in effect on the date of invitation of bids, and the Supplemental Specifications and Recurring Special Provisions indicated on the Check Sheet included here in which apply to and govern the construction of Section 17-00000-01-GM, and in case of conflict with any part, or parts, of said Specifications, the said Special Provisions shall take precedence and shall govern.



BLR 11310 (Rev. 7/05)

## Maintenance of Roadways

Effective: September 30, 1985 Revised: November 1, 1996

Beginning on the date that work begins on this project, the Contractor shall assume responsibility for normal maintenance of all existing roadways within the limits of the improvement. This normal maintenance shall include all repair work deemed necessary by the Engineer, but shall not include snow removal operations. Traffic control and protection for maintenance of roadways will be provided by the Contractor as required by the Engineer.

If items of work have not been provided in the contract, or otherwise specified for payment, such items, including the accompanying traffic control and protection required by the Engineer, will be paid for in accordance with Article 109.04 of the Standard Specifications.

## TRAFFIC CONTROL PLAN

Traffic Control shall be according to the applicable sections of the Standard Specifications, the Supplemental Specifications, the "Illinois Manual on Uniform Traffic Control Devices for Streets and Highways", any special details and Highway Standards contained in the plans, and the Special Provisions contained herein.

Special attention is called to Article 107.09 of the Standard Specifications and the following Highway Standards, Details, Quality Standard for Work Zone Traffic Control Devices, Recurring Special Provisions and Special Provisions contained herein, relating to traffic control.

~~The Contractor shall contact the District One Bureau of Traffic at least 72 hours in advance of beginning work.~~ The Contractor shall contact Downers Grove Public Works at least 72 hours in advance of beginning work.

STANDARDS:
701301-04
701501-06
701801-06
701901-06

DETAILS: TC-10, TC-13

SPECIAL PROVISIONS: See SP #29 in Special Provisions

Basis of Payment: This work shall be included in the Lump Sum cost for TRAFFIC CONTROL, MAINTENANCE OF TRAFFIC.

**STATUS OF UTILITIES TO BE ADJUSTED**
Effective: January 30, 1987
Revised: January 24, 2013

Utilities companies involved in this project have provided the following estimated durations:

| ***Name of Utility*** | ***Type*** | ***Location*** | **Estimated Duration of Time for the Completion of Relocation or Adjustments** |
|---|---|---|---|
| ComEd<br>1910 S Briggs Street<br>Joliet, IL 60433<br>Attn: Tim Coslet<br>(815)724-5010 | Electric | Entire Job | None Anticipated |
| Comcast<br>688 Industrial Drive<br>Elmhurst, IL 60126<br>Attn: Bob Schulter<br>(630) 600-6347 | Cable | Entire Job | None Anticipated |
| Downers Sanitary Dist.<br>2710 Curtiss Street<br>Downers Grove, IL 60515<br>Attn: Ted Cherwak<br>(630) 969-0664 | Sanitary | Entire Job | None Anticipated |
| AT & T<br>4513 Western Avenue<br>Lisle, IL 60532<br>Attn: Terry Wasik<br>(630) 573 6481 | Telephone | Entire Job | None Anticipated |
| Nicor Gas<br>1784 Ferry Road<br>Naperville, IL 60563<br>Attn: Constance Lane<br>(630) 388-3830 | Gas | Entire Job | None Anticipated |

The above represents the best information available to the Department and is included for the convenience of the bidder. The applicable portions of Articles 105.07 and 107.31 of the Standard Specifications shall apply.

In accordance with 605 ILCS 5/9-113 of the Illinois Compiled Statutes, utility companies have 90 days to complete the relocation of their facilities after receipt of written notice from the Department. The 90-day written notice will be sent to the utility companies after the following occurs:

1) Proposed right of way is clear for contract award.
2) Final plans have been sent to and received by the utility company.
3) Utility permit is received by the Department and the Department is ready to issue said permit.
4) If a permit has not been submitted, a 15 day letter is sent to the utility company notifying them they have 15 days to provide their permit application. After allowing 15 days for submission of the permit the 90 day notice is sent to the utility company.
5) Any time within the 90 day relocation period the utility company may request a waiver for additional time to complete their relocation. The Department has 10 days to review and respond to a waiver request.

# INDEX
# FOR
# SUPPLEMENTAL SPECIFICATIONS
# AND RECURRING SPECIAL PROVISIONS

Adopted January 1, 2017

This index contains a listing of SUPPLEMENTAL SPECIFICATIONS, frequently used RECURRING SPECIAL PROVISIONS, and LOCAL ROADS AND STREETS RECURRING SPECIAL PROVISIONS.

ERRATA Standard Specifications for Road and Bridge Construction (Adopted 4-1-16) (Revised 1-1-17)

## SUPPLEMENTAL SPECIFICATIONS


| Std. Spec. Sec. | | Page No. |
|---|---|---|
| 106 | Control of Materials | 1 |
| 403 | Bituminous Surface Treatment (Class A-1, A-2, A-3) | 2 |
| 420 | Portland Cement Concrete Pavement | 3 |
| 502 | Excavation for Structures | 5 |
| 503 | Concrete Structures | 7 |
| 504 | Precast Concrete Structures | 10 |
| 542 | Pipe Culverts | 11 |
| 586 | Sand Backfill for Vaulted Abutments | 12 |
| 670 | Engineer's Field Office and Laboratory | 14 |
| 704 | Temporary Concrete Barrier | 15 |
| 888 | Pedestrian Push-Button | 17 |
| 1003 | Fine Aggregates | 18 |
| 1004 | Coarse Aggregates | 19 |
| 1006 | Metals | 21 |
| 1020 | Portland Cement Concrete | 22 |
| 1103 | Portland Cement Concrete Equipment | 24 |

Illinois Department of Transportation

# Check Sheet For Recurring Special Provisions

The Following Recurring Special Provisions Indicated By An "X" Are Applicable To This Contract And Are Included By Reference:

## Recurring Special Provisions

| Check Sheet # | | | Page No. |
|---|---|---|---|
| 1 | ☐ | Additional State Requirements for Federal-Aid Construction Contracts | 26 |
| 2 | ☐ | Subletting of Contracts (Federal-Aid Contracts) | 29 |
| 3 | ☐ | EEO | 30 |
| 4 | ☐ | Specific EEO Responsibilities Non Federal-Aid Contracts | 40 |
| 5 | ☐ | Required Provisions - State Contracts | 45 |
| 6 | ☐ | Asbestos Bearing Pad Removal | 51 |
| 7 | ☐ | Asbestos Waterproofing Membrane and Asbestos Hot-Mix Asphalt Surface Removal | 52 |
| 8 | ☐ | Temporary Stream Crossings and In-Stream Work Pads | 53 |
| 9 | ☐ | Construction Layout Stakes Except for Bridges | 54 |
| 10 | ☐ | Construction Layout Stakes | 57 |
| 11 | ☐ | Use of Geotextile Fabric for Railroad Crossing | 60 |
| 12 | ☐ | Subsealing of Concrete Pavements | 62 |
| 13 | ☐ | Hot-Mix Asphalt Surface Correction | 66 |
| 14 | ☐ | Pavement and Shoulder Resurfacing | 68 |
| 15 | ☐ | Patching with Hot-Mix Asphalt Overlay Removal | 69 |
| 16 | ☐ | Polymer Concrete | 70 |
| 17 | ☐ | PVC Pipeliner | 72 |
| 18 | ☐ | Bicycle Racks | 73 |
| 19 | ☐ | Temporary Portable Bridge Traffic Signals | 75 |
| 20 | ☐ | Work Zone Public Information Signs | 77 |
| 21 | ☐ | Nighttime Inspection of Roadway Lighting | 78 |
| 22 | ☐ | English Substitution of Metric Bolts | 79 |
| 23 | ☐ | Calcium Chloride Accelerator for Portland Cement Concrete | 80 |
| 24 | ☐ | Quality Control of Concrete Mixtures at the Plant | 81 |
| 25 | ☒ | Quality Control/Quality Assurance of Concrete Mixtures | 89 |
| 26 | ☐ | Digital Terrain Modeling for Earthwork Calculations | 105 |
| 27 | ☐ | Reserved | 107 |
| 28 | ☐ | Preventive Maintenance - Bituminous Surface Treatment | 108 |
| 29 | ☐ | Preventive Maintenance - Cape Seal | 114 |
| 30 | ☐ | Preventive Maintenance - Micro-Surfacing | 129 |
| 31 | ☐ | Preventive Maintenance - Slurry Seal | 140 |
| 32 | ☐ | Temporary Raised Pavement Markers | 149 |
| 33 | ☐ | Restoring Bridge Approach Pavements Using High-Density Foam | 150 |
| 34 | ☐ | Portland Cement Concrete Inlay or Overlay | 153 |

The Following Local Roads And Streets Recurring Special Provisions Indicated By An "X" Are Applicable To This Contract And Are Included By Reference:

Local Roads And Streets Recurring Special Provisions


| Check Sheet # | | | Page No. |
|---|---|---|---|
| LRS 1 | | **Reserved** | 158 |
| LRS 2 | ☐ | Furnished Excavation | 159 |
| LRS 3 | ☒ | Work Zone Traffic Control Surveillance | 160 |
| LRS 4 | ☐ | Flaggers in Work Zones | 161 |
| LRS 5 | ☒ | Contract Claims | 162 |
| LRS 6 | ☒ | Bidding Requirements and Conditions for Contract Proposals | 163 |
| LRS 7 | ☐ | Bidding Requirements and Conditions for Material Proposals | 169 |
| LRS 8 | | **Reserved** | 175 |
| LRS 9 | ☐ | Bituminous Surface Treatments | 176 |
| LRS 10 | | **Reserved** | 177 |
| LRS 11 | ☒ | Employment Practices | 178 |
| LRS 12 | ☒ | Wages of Employees on Public Works | 180 |
| LRS 13 | ☒ | Selection of Labor | 182 |
| LRS 14 | ☒ | Paving Brick and Concrete Paver Pavements and Sidewalks | 183 |
| LRS 15 | ☒ | Partial Payments | 186 |
| LRS 16 | ☐ | Protests on Local Lettings | 187 |
| LRS 17 | ☒ | Substance Abuse Prevention Program | 188 |
| LRS 18 | ☐ | Multigrade Cold Mix Asphalt | 189 |

# IV. SPECIAL PROVISIONS

**The following Special Provisions shall modify, supercede, or supplement the Standard Specifications.**

Where any section, subsection, paragraph, or subparagraph of the Standard Specifications is *supplemented* by any of the following paragraphs, the provisions of such section, subsection, paragraph, or subparagraph shall remain in effect. The Special Provisions shall govern in addition to the particular Standard Specification so supplemented, and not in lieu thereof.

Where any section, subsection, paragraph, or subparagraph of the Standard Specifications is *amended, voided, or superceded* by any of the following paragraphs, any provision of such section, subsection, paragraph, or subparagraph standing unaffected, shall remain in effect. The Special Provisions shall govern in lieu of any particular provision of the Standard Specification so amended, voided, or superceded, and not in addition to the portion changed.

## 1 GENERAL CONSTRUCTION REQUIREMENTS

The following general requirements are intended to govern the overall priority for the performance of the work described in this contract. As general requirements, they are not intended to dictate to the Contractor the precise method by which these tasks shall be performed.

(A) Contractor may note streets included in the project in the general location of northwest corner of 75th St and Fairview Ave run through a multi-family residential area. Street resurfacing work in this area shall be limited to the main driving lanes. Adjacent parking areas are not included.

**Special consideration to hours and location of work near schools shall be made to allow for full and safe access during normal student arrival and departure schedules.**

The Contractor shall maintain traffic flow on All Streets during the day in accordance with the applicable special provision. Adequate signing and flagging is of particular importance for safe travel of all residents.

The Contractor shall conduct his operations to interfere as little as possible with Village employees or the public on or near the Work. All construction work specified under this contract shall be so engaged as to not impede normal traffic and pedestrian ways. Any barricading to detour traffic must receive prior written approval from the Engineer.

Unless otherwise allowed by the Village, non-poured and/or non-finished concrete shall not be allowed to extend over a Saturday and Sunday period. All construction work shall be done such that continuous access to schools or businesses is maintained, although it may be restricted to one lane with proper barricading.

All voids and open excavation remaining adjacent to newly constructed curb and gutter, sidewalks, driveways, etc., must be addressed in a timely manner. For that period prior to full parkway restoration or turf placement, the Contractor shall backfill and grade all disturbed areas in the parkway so as to insure the safety of the general public. Parkways shall be left in a safe, clean and usable condition conducive to foot traffic and to the satisfaction of the Village. The Contractor shall also work to keep disturbed areas in the parkway weed free.

All street openings made prior to November 15th shall be fully restored according to the applicable special provisions, and the street reopened to regular traffic upon the availability of hot-mix bituminous concrete. The Contractor shall assume the risk of restoration over those reaches of pipe installed but not yet pressure-tested for pipe integrity.

If the project requires the phasing of construction, the contractor is to follow the phasing shown in the plan set. Any variations in the phasing plan shown on the plan set must be approved in writing by the Engineer before construction begins. The contractor will not be allowed to proceed to another phase without the approval of the Engineer. **The contractor will receive no additional compensation for constructing the project in phases.**

No more than three hundred linear feet (300 LF) of pavement may be open-cut and closed to use by the motoring public, and access to **all** individual drives within the current work zone must be restored at the end of each workday, unless a Village-approved phasing plan shows otherwise.

## 2 PRE-QUALIFICATION

All Bidders must supply Certificate of Eligibility from IDOT, Prequalified 003 HMA Plant Mix.

## 3 COMPLETION TIME

In addition to completion date listed on Proposal, BLR 12200 Pg. 3 of 6, the Contractor shall note the following. This project incorporates multiple phases of construction with various types of street rehabilitation treatments. Besides the overall time limit of the project, there are also interim deadlines on specific parts of the work in order to reduce the time residents are inconvenienced as a result of the project. Should the Contractor fail to complete the work within the stipulated time frames and/or prior to the completion date, the Contractor shall be liable for liquidated damages.

## 4 LIQUIDATED DAMAGES

The Contractor must complete the work in accordance with the completion time requirements. If he fails to do so within the times stipulated, the Contractor shall be liable for liquidated damages for each additional calendar day in strict adherence to article 108.09 of the SSRBC, except that liquidated damages shall be fixed at $1,275.00 per day.

Monetary damages will be assessed against the Contractor if he fails to complete each phase of construction as described in this contract, and the overall completion of this project within the stipulated time frames, not as a penalty but liquidated damages for delay in completion of work.

The Contractor must read carefully the special provisions pertaining to each portion of work. Certain parts or phases of the proposed work will have intermittent time frames stipulated to lessen the disruption to affected and adjacent residents and businesses.

**Phases and time frames are as follows:**

- **Once work has begun on any street with the removal of concrete items, the Contractor shall complete final surface course placement within 40 calendar days.**
- **Curb replacement and permanent driveway restoration shall be completed within 10 calendar days of curb removal. This includes any sidewalk work and / or replacement of HMA or PCC driveway as designated.**
- **All voids / open excavations remaining adjacent to newly constructed curb and gutter, sidewalks, driveways, etc., shall be properly backfilled, compacted and graded per the specifications within 5 calendar days of their completion.**
- **The Contractor shall complete final surface course placement within 10 calendar days of pavement milling / surface removal.**
- **Unless otherwise dictated by the specifications, final parkway restoration / sod placement shall be completed within 7 calendar days of a street receiving final surface course placement.**
- **Placement of new aggregate shoulders shall be completed within 7 calendar days of a street receiving final surface course placement.**

## 5 ACCESS AND WATER SHUT OFF NOTIFICATION

If access to a driveway will be blocked, or water will be turned off, the Contractor shall give that resident or business proper written notification at least 24 hours in advance. The Contractor must provide them the opportunity to remove their cars from the drive or make other arrangements, and prepare for any shutdown of the water system. Samples of written notices shall be submitted to the Engineer for approval.

In addition, the Contractor shall be responsible for notifying the resident or business verbally on the morning of any driveway closure, to ensure awareness of the lack of access.

**Basis of Payment**: This work shall be considered **INCIDENTAL** to the project.

## 6 TREE PROTECTION

Municipal Codes regarding trees, including tree protection requirements for public parkway trees, are located in Chapter 24 of the Downers Grove Municipal Code. Specifically, Municipal Codes 24-7 and 24-8 detail the public parkway tree protection sizes and fines for violations. The Village Forester shall approve all tree protection measures and any deviations. All tree protection measures and any deviations shall be noted in the contract specifications and on approved project plan sheets and permits using the guidelines listed below.
Tree protection shall include avoiding damage to the above ground tree branches and trunk, and the below ground root system and surrounding soil. Tree crowns and trunks shall not suffer any branch or bark loss. Roots shall be protected from compaction, storage of materials, severing, regrading of the parkway or excavation unless specifically noted on the project plan sheets.

The Critical Root Zone, or CRZ, is the area immediately surrounding a tree that must be protected from damage. In a municipal parkway setting with utilities and paved or concrete surfaces, the size of the CRZ has been adjusted to form a rectangle around the parkway tree trunk with minimum dimensions listed in the following table. The depth of the CRZ extends to 4 feet below the natural ground surface level.

| Parkway Tree diameter at 4.5' | Width street to property (min. curb to sidewalk) | Length along street (minimum) | Depth |
|---|---|---|---|
| 0 – 12.0 inches | 10.0 feet | 10 feet | 4 feet |
| 12.1 – 24.0 inches | 10.0 feet | 20 feet | 4 feet |
| 24.1 or more inches | 10.0 feet | 30 feet | 4 feet |

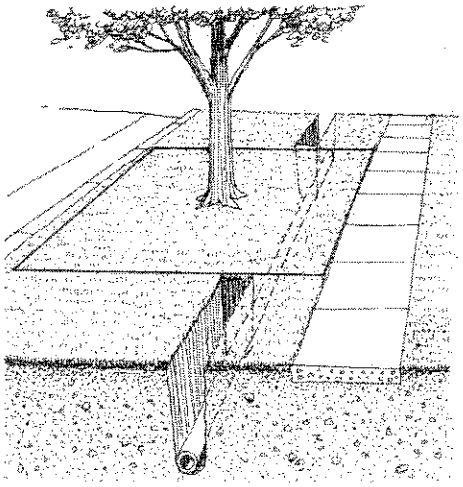

For projects that involve excavations of less than one (1) foot in depth in the parkway or street and are replacing structures in the same location, fencing of the public parkway trees shall not be required. Example projects include, but are not limited to, street pavement resurfacing, curb removal/replacement, driveway removal/replacement, or sidewalk removal/repairs or new sidewalk installations. Contractors shall be mindful of the CRZ dimensions and potential for fines if any parkway trees suffer any unauthorized damage as determined by the Village Forester.

For projects that involve excavations of one (1) or more feet in depth in the parkway or street or both, fencing of the public parkway trees shall be required. Example projects include, but are not limited to, watermain replacements with new roundway keystops and domestic service box installations, sanitary line replacements and new service connections, new or replacement natural gas services, new or replacement phone or fiber optic lines, or new or replacement storm sewers, or projects that widen roads which in turn decreases the parkway soil volume around public parkway trees.

Projects that require fencing (listed above) shall fence the public parkway trees with six (6) foot high chain link construction fence secured to metal posts driven in the ground which are spaced no further than ten (10) feet apart. The dimensions of the fence shall depend on the tree diameter size and shall follow the table listed for the CRZ above, or as large as practical dependent on driveways and other field conditions. The fenced rectangle shall have three (3) sides with the opening facing the adjacent residences for easy access for mowing or tree care. Under no circumstances shall any items be stored within the fence. All fencing shall be maintained daily in an upright good condition. The size and location of all fencing shall be shown on the project plan sheets.

To avoid damage to the CRZ, utilities must be augered underneath the public parkway trees. Excavation pits for augering equipment are to be outside the fenced area and are to be shown on the project plan sheets. Excavation pits for roundway keystops and domestic service boxes are to be as small as practical with excavation occurring in a direction away from the adjacent public parkway tree.

In cases when severing of roots within a portion of the CRZ may be unavoidable (ex. sidewalk installation, curb replacement, water or sanitary service replacement), subject to the approval of the Village Forester, sharp clean cuts shall be made on root ends to promote wound closure and root regeneration. Root pruning and excavation activities shall occur such that the smallest volume of soil and roots is disturbed, and the locations shall be shown on the project plan sheets.

In addition to fines and citations that may be assessed for violations of any Chapter 24 of the Municipal Code (such as not maintaining fencing around the CRZ or unauthorized removal of protected trees), the contractor may be subject to the following provisions:

- issuance of an invoice for the value or partial value of the tree lost due to damage to either the above ground or below ground portions of the parkway tree, or unauthorized tree removal.
- costs of repairs, such as pruning or cabling, or costs for removal of the damaged parkway tree along with the stump if the tree cannot remain in the right-of-way.
- fines of $500 for the 1st offense; $1,000 for the 2nd offense; $2,500 for the 3rd and subsequent offenses.
- each day during which a violation continues shall be construed as a separate and distinct offense.

The value or partial value of the tree lost shall be determined by the Village Forester using the most current edition of the Guide for Plant Appraisal (prepared by the Council of Tree & Landscape Appraisers and the International Society of Arboriculture) and the most current edition of the Species Ratings & Appraisal Factors for Illinois (prepared by the Illinois Arborist Association). The total cost determined for the damage shall be deducted from the payments made to the Contractor for the project. Should the Village hire another Contractor or tree service to complete pruning work, these costs shall also be deducted from the payments made to the Contractor.

Method of Measurement: This work will be measured for payment at the contract unit price per linear foot of fencing as specified. **Only those trees meeting the guidelines and are properly fenced per the specifications shall be counted for payment**. All other work as specified herein shall be considered incidental and will not be paid for separately.

**Basis of Payment**: All work as specified herein shall not be paid for separately and shall be considered incidental to the contract.

## 7 CLEANING UP

The Contractor shall, at all times, keep the premises free from an accumulation of waste material or rubbish caused by his employees or work. At the end of the day, he shall remove all his rubbish from and about the streets and sidewalks. All his tools, form boards, and surplus materials shall be removed and relocated to any temporary on-site storage location assigned by the Village or its Engineer, and shall leave his work "broom clean" or its equivalent, unless more precisely defined. Upon completion of the work called for by

the contract, and upon final inspection and acceptance, the Contractor shall remove any of his remaining rubbish, tools, form boards, and surplus materials completely from the work site.

In case of dispute, the Village may remove the rubbish or other materials and charge the cost to the Contractor.

## 8 EXISTING UTILITIES

Existing Public Utilities, such as watermains, sewers, gas lines, streetlights, telephone lines, electric power lines, etc., shall be protected against damage during the construction of this project. The Contractor shall contact the Owners of all public utilities and obtain locations of all utilities within the limits of the proposed construction and make arrangements, if necessary, to adjust or move any existing utility at the utility company's expense. Any expense incurred by the contractor in connection with making arrangements shall be borne by the Contractor and considered incidental to the contract. It shall be this Contractor's responsibility to determine the actual location of all such facilities in the field.

The adjustment of all facilities of Nicor, SBC, the Commonwealth Edison Co., etc. shall be done by the respective utility company, and if known, are indicated on the plans as to be done "By Others". All other utility adjustments to sewer, water, and local facilities shall be performed under this contract, under the supervision of the Owner of the utility, and will be paid for under the respective items in the contract unless otherwise indicated on the plans or directed by the Engineer.

**Any existing facilities, residential or commercial sprinkler systems, etc. disturbed shall be returned to their original condition and any damage to said facilities shall be repaired immediately. The cost of repairs of any damaged utility shall be by agreement between the Contractor and the facility owner or utility company, and at no cost to the Village.**

Whenever the locations of existing utilities are known, the approximate location of said utility is indicated on the plans. This information is given only for the convenience of the Bidder and the Village assumes no responsibility as to accuracy of the information provided. The Contractor shall consider in his bid the location of all permanent and temporary utility appurtenances to their present or relocated positions, whether shown on the plans or not, and no additional compensation will be allowed for delays, inconvenience, or special construction methods required due to the existence of said appurtenances.

Whenever obstructions are encountered during the progress of the work and interfere to such an extent that an alteration in the plan is required, the Engineer shall order a deviation in the plan as required, the Engineer shall order a deviation in the line and/or grade to resolve the conflict, or relocation of the obstruction. The Contractor will be compensated for any additional pipe material, fittings, granular backfill, or structures required at the respective contract prices, and measured as specified in the Contract. No additional compensation will be allowed for delays or inconveniences, additional excavation, or any special construction methods required in prosecuting the work due to the existence of said obstruction.

## 9 CLASS D PATCHES, 4" & 6"

Description: This work shall consist of pavement patching by methods and with materials in accordance with Sec. 442 of the Standard Specifications, except as amended herein.
The Contractor shall not use equipment of excessive size or weight that causes damage to existing pavement or appurtenances. Any damage done to the existing pavement or appurtenances that are to remain in place shall be repaired or removed and replaced by the contractor at his/her own expense, as directed by the Engineer.

Pavement patching shall include the saw cutting of existing pavement to a depth not less than four inches (4") or six inches (6") where marked in the field by the Engineer. Pavement patches shall vary in area but minimum width shall be measured at five feet (5'). Pavement patching shall be to a depth not less than four inches (4") or six inches (6"), and shall be a minimum of 4" or 6" below milled surface when Hot-Mix Asphalt Surface Removal is called for.

Where applicable the existing subbase shall be leveled and compacted. Where remaining base is existing HMA, PCC or brick, the bottom of each prepared hole shall be free of all loose material and a bituminous prime shall be applied to the bottom prior to replacement of HMA patches.

The use of surface removal equipment that complies with Art. 440.04 of the SSRBC will be permitted. The edges of the patch shall be smooth and free of loose material to a depth of not less than four inches or six inches.

The hot-mix asphalt material shall conform to the requirements for Hot-Mix Asphalt Binder Course, IL-19.0, N70.

Method of Measurement: Pavement removal and replacement will be measured for payment in place, and the area computed in square yards. Patches determined to be 25 square yards or greater in area shall be classified as Type IV, 4" or Type IV, 6". Patches determined to be less than 25 square yards in area shall be classified as 4" Special or 6" Special.

Basis of Payment: This work shall be paid for at the contract unit price per Square Yard for CLASS D PATCHES, TYPE IV, 4" or CLASS D PATCHES, 4" SPECIAL or CLASS D PATCHES, TYPE IV, 6" or CLASS D PATCHES, 6" SPECIAL which price shall be payment in full for the work as specified herein.

## 10 PAVEMENT REMOVAL & HMA REPLACEMENT, 8" SPECIAL

Description: This work shall consist of pavement patching by methods and with materials in accordance with the applicable parts of Sec. 442 of the Standard Specifications, except as amended herein.

The Contractor shall not use equipment of excessive size or weight that causes damage to existing pavement or appurtenances. Any damage done to the existing pavement or appurtenances that are to remain in place shall be repaired or removed and replaced by the contractor at his/her own expense, as directed by the Engineer.

Pavement patching shall include the full depth saw cutting of the existing pavement as marked by the Engineer. The existing sub-base shall be leveled and compacted. The edges will be smooth and free of loose material to the specified depth of patch.

The hot-mix asphalt material shall conform to the requirements for Hot-Mix Asphalt Binder Course, IL-19.0, N70, and will be placed in compacted lifts not to exceed four inches.

Method of Measurement: Pavement removal and replacement will be measured for payment in place, and the area computed in square yards.

Basis of Payment: This work shall be paid for at the contract unit price per Square Yard for PAVEMENT REMOVAL AND HOT-MIX ASPHALT REPLACEMENT, 8" SPECIAL.

## 11 COMBINATION CONCRETE CURB AND GUTTER REMOVAL

Description: This work shall consist of the removal of existing P.C.C. Curb and Gutter of the type and size at the locations noted in Schedule of Quantities. This work shall be performed in accordance with Section 440 of the Standard Specifications, except as amended herein.

**Unless otherwise allowed by the engineer, curb and gutter removal and replacement shall be done on one side of a street at a time to allow for on street parking. No curb shall be removed from the opposite side of the street until completion of curb replacement and full access to driveways is restored on the first side.**

This work shall include a full depth, perpendicular, straight joint sawn at the ends and all edges, including along the edge of pavement, of portions to be removed, unless otherwise directed by the engineer.

At those locations where curb removal operations fall within the Critical Root Zone (CRZ) the Contractor will be required to trench with a "chain" driven trencher immediately back of curb prior to curb removal. This procedure will proceed uninterrupted through the CRZ and insure general tree root pruning. The width of the CRZ shall be determined as noted in the general provision for TREE PROTECTION elsewhere in these documents. If it is determined that proposed removal methods do not cause undo harm to adjacent roots, the Village Forester may waive the need to perform trenching.

During removal operations Contractor shall take special care not to damage or extend sawed joint into adjacent appurtenances such as driveways and sidewalks which are to remain in place. During machine sawing operations Contractor shall also take special care to remove, clean, or otherwise account for any residue / slurry produced by the sawing so material will not be tracked by either vehicular or foot traffic onto adjacent appurtenances which are to remain in place.

Basis of Payment: This work shall be paid for at the contract unit price per Linear Foot for COMBINATION CONCRETE CURB AND GUTTER REMOVAL which price shall be payment in full for all work specified herein.

## 12 COMBINATION CONCRETE CURB AND GUTTER OF TYPE SPECIFIED

Description: This work shall consist of the replacement of existing PCC Curb and Gutter in accordance with the applicable parts of Sec. 606 of the Standard Specifications, except as amended herein.

Replacement of curb and gutter shall include the placement of three-quarter inch (3/4") premolded expansion joint filler along the back of curb, for the full depth of the curb and gutter, where abutting existing concrete.

Transverse expansion joints with 3/4" joint filler shall be constructed at five feet (5') either side of utility structures, and at no more than ninety foot (90') intervals. All expansion joints shall include the placement of two (2) three-quarter inch (3/4") dowel bars with pinched stop caps as specified on detail sheet. Two (2) three quarter inch (3/4") dowel bars shall also be placed at all construction joints as specified on detail sheet and shall be drilled into existing curb and gutter a minimum of six inches (6").

New curb and gutter shall be backfilled with existing excavated earth.

Transverse contraction joints shall be constructed at no more than fifteen foot (15') intervals.
When new curb and gutter is placed adjacent to concrete pavement or base, it shall be tied along the longitudinal construction joint with No. 6 (3/4") bars at 24" centers in accordance with the applicable portions of Article 420.05 of the Standard Specifications.

Placement of curb or curb and gutter as noted on Schedule of Quantities to be reinforced shall also include the placement of two (2) No. 4 (½") epoxy coated deformed reinforcement bars meeting the applicable portions of Section 508 of the Standard Specifications. Bars shall be placed at one-half depth of the body of the gutter running the entire length of newly placed sections. Curb or curb and gutter placed as described in this paragraph shall be paid for as CONCRETE CURB (TYPE SPECIFIED), REINFORCED or COMBINATION CONCRETE CURB AND GUTTER (TYPE SPECIFIED), REINFORCED.

Including placement of reinforcement bars, placement of curb and gutter as noted on Schedule of Quantities to be reinforced, high early shall be placed with concrete materials meeting the applicable portions of Section 442 of the Standard Specifications. A calcium chloride accelerator will not be permitted. Curb and gutter placed as described in this paragraph shall be paid for as COMBINATION CONCRETE CURB AND GUTTER (TYPE SPECIFIED), REINFORCED, HIGH EARLY.

All voids existing between newly placed curb and gutter and the adjacent roadway pavement shall be filled with Class SI concrete, prior to bituminous surface placement, to a point 1-1/2 inches below finish grade. This work shall be considered incidental.
Placement of curb and gutter shall include the application of membrane curing compound, Type III, in accordance with Articles 1020.13 and 1022.01 of the Standard Specifications unless otherwise directed by the Engineer.

If placement of curb and gutter takes place prior to April 15, or after November 1, the curb and gutter shall be properly cured and that followed by the application of protective coat in accordance with Article 420.18 of the Standard Specifications.

Basis of Payment: This work shall be paid for at the contract unit price per Linear Foot for COMBINATION CONCRETE CURB AND GUTTER (TYPE SPECIFIED) or COMBINATION CONCRETE CURB AND GUTTER (TYPE SPECIFIED), REINFORCED or CONCRETE CURB (TYPE SPECIFIED), REINFORCED which price shall be payment in full for the work as specified herein.

## 13 POROUS GRANULAR EMBANKMENT, SPECIAL

Description: This work shall consist of removing and disposing of unsuitable sub-grade, furnishing, placing and compacting porous granular material to the lines and grades shown on the plans or as directed by the Engineer in accordance with the applicable portions of Sections 202 and 207 of the Standard Specifications. The material shall be used as a bridging layer over soft, pumpy, loose soil areas and for placement under water. The material shall conform with Article 1003.04 and 1004.05 of the Standard Specifications except the gradation shall be as follows:

1. Crushed Stone, Crushed Blast Furnace Slag and Crushed Concrete

| Sieve Size | Percent Passing |
|---|---|
| *6" | 97±3 |
| *4" | 90±10 |
| 2" | 45±25 |
| #200 | 5±5 |

2. Gravel, Crushed Gravel and Pit Run Gravel

| Sieve Size | Percent Passing |
|---|---|
| *6" | 97±3 |
| *4" | 90±10 |
| 2" | 55±25 |
| #4 | 30±20 |
| #200 | 5±5 |

*For undercuts less than 18" the percent passing the 6" sieve may be 90±10 and the 4" sieve requirement eliminated.

The porous granular material shall be placed in one lift when the total thickness to be placed is two (2) feet thick or less or as directed by the Engineer. Rolling each lift of the porous granular material with a vibratory roller meeting the requirements of Article 1101.01 of the Standard Specifications should be sufficient to obtain the desired keying or interlock and necessary compaction. The Engineer shall verify that adequate keying has been obtained.

A three- (3) inch nominal thickness top lift of capping aggregate having a gradation of CA-6 will be required. The use of on-site bituminous grindings resulting from bituminous surface removal, substantially meeting the gradation of CA-6, shall also be permitted. The granular cap shall be compacted to the satisfaction of the Engineer. It shall be the Contractor's responsibility that all proposed bituminous replacement regarding patching and paving operations in these areas will meet the specified performance criteria of their respective pay items.

Construction equipment not necessary for the completion of the replacement material will not be allowed on the undercut areas until completion of the recommended thickness of the porous granular embankment, special.

This work will be measured for payment in accordance with Article 207.04 of the Standard Specifications. When specified on the contract, the theoretical elevation of the bottom of the aggregate subgrade shall be used to determine the upper limit of Porous Granular Embankment, Special. The volume will be computed by the method of average end areas.

Basis of Payment: This work shall be paid for at the contract unit price per Cubic Yard for: POROUS GRANULAR EMBANKMENT, SPECIAL, which price shall include the capping aggregate, as required.

The Porous Granular Embankment, Special shall be used as field conditions warrant at the time of construction. No adjustment in unit price will be allowed for an increase or decrease in quantities from the estimated quantities shown on the plans.

## 14 MANHOLES OR INLETS, TO BE ADJUSTED OR RECONSTRUCTED

Description: This item shall be done in accordance with Sec. 602 of the Standard Specifications for Road and Bridge Construction and the following provisions.

All excavation for structure adjustment shall be replaced with Class SI concrete and in accordance with the attached details. For excavation required for reconstructed items, backfill materials shall be mechanically compacted SELECTED GRANULAR BACKFILL placed per the special provision elsewhere in these documents.

Castings shall be set in full mortar or bituminous mastic beds. The adjustment of the casting to the required final grade shall be made with precast concrete adjusting rings. Brick, concrete block, or wooden shims will not be permitted.

When adjustments include new frame and grate or new frame and lid, all replacement frames, grates and lids shall be heavy duty. Depending on the type of frame, care shall be taken to properly align the new frame with the curb and gutter, and maintain the proper size opening into the structure.
Although the cost of adjusting structures per this specification will be paid for under this contract, the Contractor shall be aware that many of the structures are not the property of the Village of Downers Grove, and that such work may require inspections and/or permits from other governmental agencies.

For those structures noted on the Schedule of Quantities or as designated by the Engineer as MANHOLE TO BE ADJUSTED, SPECIAL, for that period after Hot-Mix Asphalt Surface Removal operations and prior to adjustment to finished pavement elevation, frames and lids or grates shall be removed from the structure and stored in a safe manner until reused. The resulting void over the structure shall be covered with a steel plate and temporary pavement, or other approved method, capable of carrying the anticipated daily traffic in a safe manner. The Contractor shall also make note of structure location so it may be reestablished after initial bituminous paving operations have been completed.

For those structures designated as INLET TO BE ADJUSTED WITH NEW TYPE 3 FRAME AND GRATE, SPECIAL, the new frame and grate shall be a standard Type 3, or approved equal, except the barred curb box shall be replaced with an open face curb box.

Basis of Payment: This item shall be paid for at the contract unit price Each for MANHOLE TO BE ADJUSTED or MANHOLE TO BE ADJUSTED, SPECIAL or MANHOLE TO BE ADJUSTED WITH NEW FRAME AND LID (TYPE SPECIFIED) or MANHOLE TO BE RECONSTRUCTED.

This item shall also be paid for at the contract unit price Each for INLET TO BE ADJUSTED or INLET TO BE ADJUSTED WITH NEW TYPE 3 FRAME AND GRATE, SPECIAL or INLET TO BE RECONSTRUCTED WITH NEW TYPE 3 FRAME AND GRATE, SPECIAL which price shall be payment in full for all labor and materials specified herein including backfill with Selected Granular Backfill.

## 15 TREE ROOT PRUNING

Description: All trees, public or private, affected by new sidewalk installation within its root protection zone, shall be root pruned prior to any excavation taking place. Root pruning shall be performed in accordance with the applicable portions of Section 201 of the Standard Specifications as well as the Tree Protection Zone detail of the Plans. Root pruning shall be done only to the depth of the excavation necessary for installing the new walk. Root pruning shall start and proceed uninterrupted for the length of travel through the root protection zone. Root pruning shall be made no more than 10 inches from the tree-side edge of the proposed walk.
Approval by the Village Forester of the equipment to be used for root pruning, as well as the proposed path of the root pruning work, is required prior to the work being performed. The Engineer or his representative shall permit no excavation until written approval is obtained by the Contractor from the Village Forester. Additionally, no materials or equipment may be stored or kept in the Tree Protection Zone. Tree damage, as determined by the Village Forester, shall be assessed to the Contractor using the most recent edition of the Guide for Plant Appraisal, published by the International Society of Arboriculture.

Basis of Payment: This work shall be paid for at the contract unit price per Each for TREE ROOT PRUNING.

## 16 PORTLAND CEMENT CONCRETE SIDEWALK

Description: This work shall consist of the removal and replacement of P.C.C. Sidewalk in accordance with the SSRBC, except as amended herein.

**Sidewalk removal and replacement shall be done on one side of a street at a time to allow for pedestrian mobility. No sidewalk shall be removed from the opposite side of the street until sidewalks on the first side are safely open to pedestrian traffic.**

Removal of sidewalk shall include the saw cutting of existing concrete as directed by the Engineer. Except for those locations specifically marked for Tree Root Pruning, removal of sidewalks shall also include any necessary additional pruning and removal of tree roots, bituminous paved sidewalks and/or bituminous overlayment of existing sidewalks, or excavation necessary to place the proposed sidewalk, curb ramp or side curb.

Replacement of sidewalk shall be of the width and thickness as noted on the Schedule of Quantities and as directed by the Engineer. Thickness of the proposed sidewalk shall generally be (5") five inch for standard or courtesy walks, (6") six inch for full width across residential drives, and (8") eight inch for full width across commercial drives.

Placement of P.C.C. sidewalk shall include the excavation for and placement of four inches (4") of Type B, CA-6, compacted aggregate base, the (3/4") three-quarter inch scoring of contraction joints (5') five feet on center, the placing of (1/2") one-half inch premolded expansion joints where new concrete abuts existing concrete and/or at (50') fifty feet on center and/or at the end of a pour. This work shall also include the adjustment to proper grade of all water valve or utility boxes encountered.

Replacement of sidewalk shall include the application of membrane curing compound, Type III, in accordance with Articles 1020.13 and 1022.01 of the Standard Specifications unless otherwise directed by the Engineer.

At those locations where existing street configuration does not contain curb and gutter, it is necessary to end construction of new sidewalk with a minimum of two (2) feet separation from the existing or proposed edge of pavement. At these locations, a HMA transition sidewalk shall be constructed between the concrete sidewalk and the edge of pavement.

Construction of the transition sidewalk shall include excavation as necessary for the full width of the concrete sidewalk, placement and compaction of the four inches (4") of Type B, CA-6 aggregate base, and the placement and compaction of 5 inches (5") of Hot-Mix Asphalt Surface, Mixture D, N50 (IL 9.5) per the applicable portions of Sec. 442 of the Standard Specifications. Asphalt to be placed in compacted layers not to exceed four inches (4").

Hot-Mix Asphalt Binder Course, IL-19.0, N50 may be utilized for the bottom courses, but in all cases the top course shall be a minimum 1 ½ inch lift of the HMA Surface noted above.

For those locations as noted on the Schedule of Quantities or as designated by the Engineer for Detectable Warnings, work shall be completed in accordance with Section 424 of the SSRBC and the Standards included in the details regarding curb ramps with detectable warnings and as amended herein.

Detectable Warnings will NOT include any placement of full depth red dyed concrete or other on-site fabrication such as stamping or molding the fresh concrete with coloring added to the surface of the concrete.

Detectable Warnings shall be limited to inserts meeting the requirements of the ADAAG and subject to approval by the Village.

Color of detectable warnings shall be brick red. The area of red detectable warning shall be protected from overspray during the application of Type III membrane curing compound.

If replacement of sidewalk takes place prior to April 15, or after November 1, all sidewalk shall be properly cured and that followed by the application of protective coat in accordance with Article 420.18 of the Standard Specifications.

Basis of Payment: This work shall be paid for at the contract unit price per Square Foot for PORTLAND CEMENT CONCRETE SIDEWALK REMOVAL and for PORTLAND CEMENT CONCRETE SIDEWALK, 5" or PORTLAND CEMENT CONCRETE SIDEWALK, 6" which price shall be payment in full for the work as specified herein except for Detectable Warnings and Side Curbs which shall be paid for separately.

When side curbs are necessary adjacent to newly constructed curb ramps, the curbs shall be measured for payment separate from the sidewalk and shall be paid for at the contract unit price per Linear Foot for CONCRETE CURB, TYPE B-6.0, REINFORCED.

Detectable warnings shall be paid for at the contract unit price per Square Foot for DETECTABLE WARNINGS which price shall be in addition to the cost for placement of the 5" sidewalk at the curb ramp.

## 17 PARKWAY RESTORATION

Description: This item shall be done in accordance with the applicable portions of Sec. 252 of the Standard Specifications and the following provisions.

As contract work progresses through the Village, parkway restoration work shall commence in a timely manner in areas where permanent placement of new curb and gutter, driveways, sidewalks, etc., has been completed. **Parkway restoration including sod placement shall be completed on a street within 7 calendar days of final surface course placement.** Under no circumstances shall the Contractor prolong final grading, shaping and sod placement so that the entire project can be permanently restored at the same time.

This work shall consist of the excavation, topsoiling and sodding from a minimum of one and one-half (1-1/2) feet to a maximum of three (3) feet behind or adjacent to all curbs, sidewalks and driveways removed and replaced during the course of construction or as directed by the Engineer. Restoration will also be performed on areas disturbed by storm sewer or culvert construction.

**A number of locations may require extensive excavation or regrading of the parkway due to alignment change necessary to bring corner sidewalk ramps within ADA compliance.**

All topsoil to be used for parkway restoration shall be obtained from outside the limits of this improvement, transported to the site and placed at required locations to a minimum depth of 4". All materials shall meet the requirements of Art. 1081.05 of the Standard Specifications. All placement of topsoil shall meet the requirements of Sec. 211 of the Standard Specifications.

All sod shall be an approved grass that is native to the locality of work meeting the requirements of Art. 1081.03 of the Standard Specifications. All placement of sod shall meet the requirements of Sec. 252 of the Standard Specifications.

For that period prior to full parkway restoration, the Contractor shall backfill and grade all disturbed areas so as to insure the safety of the general public. **All voids / open excavations remaining adjacent to newly constructed curb and gutter, sidewalks, driveways, etc., shall be properly backfilled, compacted and graded within 5 calendar days of their completion.**

Backfill shall be compacted by mechanical and/or hand methods so future consolidation / settlement does not occur. Parkways shall be left in a safe, clean and usable condition conducive to foot traffic and to the satisfaction of the Village. The Contractor shall protect these unfinished areas against erosion and work to keep them weed free. Erosion control work such as placement of temporary seed or erosion control blanket, including their removal and redressing of the disturbed areas, shall not be paid for separately but shall be considered incidental to the cost of PARKWAY RESTORATION.

Basis of Payment: This work shall be paid for at the contract unit price per Square Yard for PARKWAY RESTORATION which price shall be payment in full for any excavation and grading necessary, the furnishing, transporting and placement of all topsoil and sod and the full watering of sod. Unless otherwise directed by the Engineer, restoration of disturbed parkways more than three (3) feet behind the back of curb or more than three (3) feet adjacent to newly constructed driveway or sidewalk or more than six (6) feet either side of the newly placed storm sewer or pipe culvert will not be paid for separately but shall be considered incidental to the contract.

## 18 HOT-MIX ASPHALT DRIVEWAY

Description: This work shall consist of the removal and replacement of asphalt driveways at locations indicated on the plans and/or as required by the Engineer.

The replacement of the driveways shall consist of preparing a subgrade at all required locations, shaping of slopes adjacent to the driveways, the placement and compacting of six inches of CA-6 Aggregate Base, and the placement and compacting of three inches (3") of Hot-Mix Asphalt Surface, Mixture D, N50 (IL 9.5).

This work shall also include the adjustment to proper grade of all water valve or utility boxes encountered.

Where the edges of the new driveway pavement are exposed adjacent to the parkway, the edges shall have a neat forty-five (45) degree angle bevel shaped, compacted and tamped tight by mechanical and/or hand methods.

The locations at which this work will be measured for payment will consist of only those areas bounded by combination concrete curb and gutter. Those areas where the surface course of the pavement flares into existing driveways beyond the limits of the fully improved areas will not be included for payment.

Basis of Payment: This work will be paid for at the contract unit price per Square Yard for HOT-MIX ASPHALT DRIVEWAY REMOVAL and for HOT-MIX ASPHALT DRIVEWAY PAVEMENT, 3" which price shall be payment in full for all work as specified herein.

## 19 PORTLAND CEMENT CONCRETE DRIVEWAY

Description: This work shall consist of the removal and replacement of concrete driveways in accordance with the applicable parts of Sec. 423 of the SSRBC except as amended herein.

This work shall include the placement of three-quarter inch (3/4") premolded expansion joint filler, for the full depth of the driveway pavement, where new concrete abuts existing concrete or as directed by the Engineer.

This work shall also include the adjustment to proper grade of all water valve or private utility boxes encountered.

Replacement of the driveways shall include the application of membrane curing compound, Type III, in accordance with Articles 1020.13 and 1022.01 of the SSRBC, unless otherwise directed by the Engineer. If replacement of the driveways takes place prior to April 15, or after November 1, the driveway shall be properly cured and that followed by the application of protective coat in accordance with Article 420.18 of the Standard Specifications.

Basis of Payment: This work will be paid for at the contract unit price per Square Yard for PORTLAND CEMENT CONCRETE DRIVEWAY REMOVAL and for PORTLAND CEMENT CONCRETE DRIVEWAY PAVEMENT, 6" which price will be payment in full for all work as specified herein.

## 20 TEMPORARY RAMP, HMA

Description: This work shall consist of construction and maintenance of hot-mix asphalt ramps for temporary access to all abutting side streets and properties per the applicable portions of Article 406.08 of the SSRBC except as amended herein.

At those locations noted on the plans or as directed by the Engineer, the Contractor shall have sufficient bituminous material at the worksite prior to beginning hot-mix asphalt surface removal operations. After hot-mix asphalt surface removal operations and prior to placement of the permanent pavement, temporary ramps shall be constructed to supply access to all abutting streets and properties where traffic is to be maintained. Unless otherwise directed by the Engineer, construction of temporary bituminous ramps for access to abutting private properties will generally be limited to where surface removal operations are over 2 1/2" inches or more in depth.

Basis of Payment: This work will be paid for at the contract unit price per Square Yard for TEMPORARY RAMP, HOT-MIX ASPHALT, which price shall include all costs of furnishing, placing and maintaining the ramps. Removal of the temporary ramps prior to the placement of permanent pavement shall also be included in this item.

## 21 DECORATIVE PAVER DRIVEWAY REMOVAL & REPLACEMENT

Description: This work shall consist of removal and replacement of existing decorative concrete or brick paver driveways or sidewalks per the applicable portions of Check Sheet LRS 14 of the SSRBC except as amended herein.

At those locations noted on the plans or as directed by the Engineer, the Contractor shall remove existing decorative pavers in such a manner so that no damage occurs to the pavers and with full intent to reuse said paver blocks. Any decorative paver block damaged to an extent that it may not be reused as part of the final pavement, sidewalk or driveway shall be replaced in kind by the Contractor at no additional cost to the Village.

Extent of existing paver removal shall be at the direction of the Engineer. This removal will only be that amount necessary to construct the new curb and gutter or other appurtenance, and replace the decorative pavers to an acceptable grade and appearance.

At those locations where it is determined that an existing bituminous base warrants removal and replacement or repair, this portion of the work would be performed and measured for payment per the special provision for CLASS D PATCHING, of the necessary thickness.

Basis of Payment: This work shall be paid for at the contract unit price per Square Yard for DECORATIVE PAVER DRIVEWAY REMOVAL AND REPLACEMENT, which price shall be payment in full for all materials and work as specified herein.

## 22 CONSTRUCTION STAKING

Description: The Contractor shall furnish and place all construction layout stakes for this project. This work shall be conducted by competent personnel with suitable equipment and supervised by a licensed Illinois Land Surveyor. The Contractor shall be responsible for layout for all curb, sidewalk, pipe culvert, driveway and pavement removal and replacement, such that all finished work shall conform substantially to the lines, grades, elevations and dimensions shown on the plans.

The Contractor shall provide adequate control points to construct the individual Project elements, and shall provide the Engineer with adequate control in close proximity to check the compliance of the elements constructed.

Basis of Payment: This work shall be paid for at the contract Lump Sum price for CONSTRUCTION STAKING.

## 23 MANHOLE AND INLET CONSTRUCTION

Description: This work shall consist of the construction of precast concrete drainage structures of the size and type shown on the plans or specified by the Engineer. Included in the contract unit price shall be all excavation, bedding, backfilling and reconnection of all existing inlet and outlet pipe. For all new structures backfill materials shall be mechanically compacted SELECTED GRANULAR BACKFILL placed per the special provision elsewhere in these documents.

All structures in excess of four feet in depth shall be equipped with cast iron steps meeting the standards of ASTM A48. Precast sections shall conform to ASTM C 478 and shall be substantially free from fractures, large or deep cracks and surface roughness. Joints between precast sections shall be designed for rubber gaskets or bituminous mastic material.

Adequate foundation for all structures shall be obtained by removal and replacement of unsuitable materials with well graded granular material; or by tightening with coarse ballast rock, or by such other means as provided for foundation preparation of the connected sewers.

Precast base sections, risers and bottoms, shall be one piece and shall be placed on a well graded granular bedding of not less than two (2) inches in thickness. The bedding course shall be firmly tamped and made smooth and level to assure uniform contact and support of the precast element.

All lift holes shall be completely filled with mortar to ensure water tightness.

Castings shall be set in full mortar or bituminous mastic beds. The adjustment of the casting to the required final grade shall be made with precast concrete adjusting rings set in full mortar or bituminous mastic beds. Maximum adjustment with rings shall be twelve (12) inches. Brick, concrete block, or wooden shims will not be permitted.

In pavements, frames and grates or lids shall be heavy duty.

Basis of Payment: This work shall be paid for at the contract unit price Each for INLET, TYPE A, 24" WITH NEW FRAME AND GRATE (TYPE SPECIFIED) which price shall be payment in full for all labor and materials specified herein including SELECTED GRANULAR BACKFILL.

## 24 SELECTED GRANULAR BACKFILL

Description: All trenches and excavations beneath pavements and driveways, as shown on the plans or as directed by the Engineer in the field, will require SELECTED GRANULAR BACKFILL.

Such material shall meet the applicable requirements of Section 1004 of the SSRBC, except as amended herein. Except for the capping aggregate, the material will meet the gradation for CA-7, CA-11 or the gradation commonly known as ¾" chip.

**Backfill shall be placed in maximum 12" lifts and compacted by vibrating plate or other mechanical compacting device in a manner consistent with the Standard Specifications, to ensure that no future settlement occurs.**

All backfilling shall be done in accordance with Section 20-2.21 of the Standard Specifications for Water and Sewer Main Construction in Illinois. Specifically, all trenches and excavations other than those shown on the plans or designated by the Engineer to receive SELECTED GRANULAR BACKFILL shall be backfilled by any acceptable method which will not dislodge or damage the pipe, or cause bridging action in the trench. After SELECTED GRANULAR BACKFILL is placed as haunching to one-half pipe outside diameter, spoil material may be used as backfill in turf areas.

**All backfilling, including granular bedding and backfill of approved excavated material, and placement and compaction of SELECTED GRANULAR BACKFILL around new or reconstructed storm sewer or structures shall be considered incidental to the contract.**

When Select Backfill is placed to the existing surface elevation and used as a temporary driving or walking surface, this item shall also include the maintenance of trench surface in a safe and usable condition, satisfactory to the engineer, until the permanent proposed pavement or walkway is completed.

This item also includes the disposal of the surplus excavated material that is replaced by selected granular backfill. Any material meeting the aforementioned gradation that has been excavated from the trenches may be used for backfilling the trenches. However, no compensation will be allowed as selected granular backfill for the portion of the trench backfilled with excavated material.

Basis of Payment: All work to backfill around new and reconstructed storm sewer or structures with SELECTED GRANULAR BACKFILL shall be considered Incidental to each respective pay item and will not be paid for separately.

## 25 STORM SEWER (CLASS, TYPE, MATERIAL, SIZE SPECIFIED)

**Description:** This item shall consist of the removal and replacement of existing Storm Sewer. Storm sewer shall be constructed with new Reinforced Concrete Pipe (RCP), of the IDOT Type appropriate for the depth of cover and the diameter shown with rubber-gasketed joints ASTM C443, or Ductile Iron Pipe (DIP), Class 52 with rubber-gasketed joints AWWA C – 111 of the diameter shown, or Polyvinyl Chloride (PVC) Pipe SDR 26 with gasketed, bell and spigot, push on type joints conforming to ASTM D3212 of the diameter shown on the Drawings.

Unless otherwise allowed by the Engineer, the Contractor shall place a well compacted, fine aggregate bedding at least four inches below the pipe and extending the entire width of the trench for the length of the pipe.

The pipe shall be placed so that the entire length of the pipe will have full bearing. No blocking of any kind shall be used to adjust the pipe to grade except when used with concrete encasement.

Laying of sewer pipe shall be accomplished to line and grade in the trench only after it has been de-watered and the foundation and/or bedding has been prepared. Mud, silt, gravel, and other foreign material shall be kept out of the pipe and off the jointing surface.

All pipe laid shall be retained in position so as to maintain alignment and joint closure until sufficient backfill has been completed to adequately hold the pipe in place. All pipes shall be laid to conform to the prescribed line and grade shown on the Plans.

The sewer pipe, unless otherwise approved by the Engineer, shall be laid up grade from point of connection on the existing sewer or from a designated starting point. The sewer pipe shall be installed with the bell end forward or upgrade, unless approved otherwise. When pipe laying is not in progress, the forward end of the pipe shall be kept tightly closed with an approved temporary plug.

The following specific items shall be considered incidental to storm sewer pipe construction and their costs shall be merged into the contract unit price per Linear Foot of the storm sewer pipe.

1. Removal of all surplus trench excavation from site.
2. Excavation for and placement of bedding material.
3. Support of trenches, including any necessary bracing or shoring.
4. De-watering of trench or excavation.
5. Placement and compaction of backfill by vibratory plate or other approved mechanical device.
6. Coring into existing drainage structures where connections are called for on the plans.

Basis of Payment: This work shall be paid for at the contract unit price per Linear Foot for STORM SEWER (CLASS, TYPE, SIZE SPECIFIED) which price shall include all labor, material, and equipment necessary for excavation, bedding, installing, jointing, and backfilling the sewers and all incidental work herein specified.

## 26 PREPARATION OF AGGREGATE BASE

Description: This work shall consist of repair and preparation of existing aggregate bases remaining after bituminous surface removal operations and performed in accordance with the applicable portions of Section 358 of the SSRBC, except as amended herein.

This work shall include the removal and disposal of any undesirable material remaining after the bituminous surface removal operations. Undesirable material is generally referring to remaining chunks of asphalt, pavement, vegetation, dirt, etc., existing in or on the aggregate base which cannot be incorporated back into the work as aggregate base.

Removal of any unsuitable soils from the subgrade beneath the aggregate base shall be per the provision for Porous Granular Embankment, Special.

After repair of base, the existing aggregate and any aggregate placed as part of the repair shall be graded to a minimum 2% cross slope to obtain a proper crown in the roadway to the satisfaction of the Engineer.

Additional aggregate required for the repair of the base shall be limited to crushed aggregate meeting the gradation of CA-6. The use of additional rollers per Section 1101 of the Standard Specifications will be allowed.

Basis of Payment: All work in connection with the repair and preparation of aggregate bases, except necessary additional aggregate, shall be paid for at the contract unit price per Square Yard for PREPARATION OF AGGREGATE BASE.

Additional aggregate required for the repair of the aggregate base or to achieve proper crown shall be paid for at the contract unit price per Ton for AGGREGATE BASE REPAIR.

## 27 AGGREGATE FOR TEMPORARY ACCESS

Description: This work shall consist of construction and maintenance of an aggregate surface ramp for temporary access to side streets and abutting properties as part of construction operations, per the applicable portions of Article 107.09 of the Standard Specifications except as amended herein.

Materials: The aggregate shall be limited to crushed aggregate meeting the gradation CA-6 and shall meet the requirements of Article 1004.04 of the Standard Specifications.

This item is limited to those locations where bituminous surface removal operations of 2 ½" (two and one half) inches or more expose the aggregate base and access is to be maintained to or across adjacent streets and curb and gutter.

Construction Requirements: After bituminous surface removal operations and prior to placement of the permanent pavement, temporary aggregate shall be placed and maintained as ramping between the existing aggregate base and all side streets, abutting properties and crosswalks where vehicle and pedestrian traffic is to be maintained. Temporary material shall be placed for the full width of the abutting property driveways or side streets.

Immediately ahead of base course paving, the temporary aggregate ramps shall be removed and may be utilized in the permanent construction or otherwise disposed of. Removal of the temporary aggregate shall be considered incidental to this item.

Method of Measurement: This work will be measured in place in tons.

Basis of Payment: This work shall be paid for at the contract unit price per Ton for AGGREGATE FOR TEMPORARY ACCESS, which price shall include all costs of furnishing, placing, maintaining and removing aggregate.

## 28 EROSION, SEDIMENTATION AND DUST CONTROL

Description: Throughout each and every phase of the project, all downstream ditches and storm sewers shall be protected from the run-off of roadway surfaces, excavations, and other construction activities generating the movement of dirt, mud, dust and debris. This work shall consist of constructing temporary erosion and sedimentation control systems as shown on the plans or as directed by the Engineer. The work shall be placed by methods and with materials in accordance with Sections 280, 1080 and 1081 of the SSRBC, except as amended herein.

All roadway surfaces shall be kept free of dirt, mud, dust and debris of any kind at all times through all phases of the project. All downstream ditches shall be protected from erosion and sedimentation by the installation of silt fence ditch checks; straw bales shall not be used. Piles of excavated material and/or trench backfill material, allowed to be in place in excess of three days, shall be protected against erosion and sedimentation runoff by use of silt fence or sediment filter logs. Storm sewer inlet structures or manholes shall be protected by temporary placement of geotextile fabric, filter baskets, or solid lids, as authorized in the field by the Engineer.

Dirt, mud, dust and debris of any kind shall be removed from the roadway surface to the satisfaction of the Engineer by any one or combination of the following: approved mechanical sweeping equipment, manual labor, or other approved techniques.

Erosion and sedimentation control measures as indicated in the Erosion Control Plan, or as directed by the Engineer shall be installed on the project site prior to beginning any construction activities which will potentially create conditions subject to erosion. Erosion control devices shall be in place and approved by the Engineer as to proper placement and installation prior to beginning other work. Erosion control protection for Contractor equipment storage sites, plant sites, and other sites shall be installed by the Contractor and approved by the Engineer prior to beginning construction activities at each site.

On those streets designated for Aggregate Base Repair and Preparation of Aggregate Base, dust control shall include the application of water to the existing aggregate base, as conditions warrant, by water truck or other approved method. Unless otherwise directed by the Engineer, during dry periods between rains, a minimum of two applications per day will be necessary.

Temporary or permanent storage in the flood plain of the following are prohibited unless elevated or flood proofed to one foot above the base flood elevation:

- Items susceptible to flood damage; or
- Unsecured buoyant materials or materials that may cause off-site damage including bulky materials, flammable liquids, chemicals, explosives, pollutants, or other hazardous materials; or
- Landscape waste.

**Silt Fence** Placement, maintenance, and removal of silt fence at areas designated by the Engineer. The work shall be placed by methods and materials in accordance with Sections 280 and 1080 of the SSRBC, except as amended herein.

**Erosion Barrier, Special** Placement, maintenance, and removal of EROSION BARRIER, SPECIAL shall be by methods and materials in accordance with applicable portions of Sections 280, 1080 and 1081 of the SSRBC, except as amended herein.

Barrier shall be placed approximately two (2 ft) +/- off edge of existing pavement or sidewalks being repaired at those locations noted on the schedule of quantities or as designated by the Engineer.

Barrier shall consist of a combination of two (2) excelsior logs or sediment filter logs staked immediately adjacent and parallel to each other. Barrier is intended to protect more sensitive wetland vegetation and turf areas from runoff and any and all workers and equipment during the duration of the improvements. All contract work near these designated sections shall take place outside the EROSION BARRIER, SPECIAL.

**DEFICIENCY CHARGE:**

The Village reserves the right to apply deficiency deductions per the applicable portions of Article 105.03 of the SSRBC.

Basis of Payment: This work shall be paid for at the contract Lump Sum price for: EROSION, SEDIMENTATION AND DUST CONTROL except for Inlet Filters and Erosion Barrier, Special which shall be paid for separately.

This work shall also be paid for at the contract unit price per Each for INLET FILTERS or INLET FILTERS CLEANING.

The double row of excelsior or sediment filter logs shall be measured as one and shall be paid for at the contract unit price per Linear Foot for EROSION BARRIER, SPECIAL.

## 29 TRAFFIC CONTROL, MAINTENANCE OF TRAFFIC

Description: This item shall include the furnishing, installing, maintaining, relocating and removing of all traffic control devices and personnel used for the purpose of regulating, warning, or directing traffic during the construction of this project. Placement and maintenance of all traffic control devices shall be in accordance with the applicable parts of Article 107.14 and Section 701 of the Standard Specifications and included Highway Standards. All traffic control devices used on this project shall conform to the Standard Specifications for Traffic Control Devices and the Illinois Manual on Uniform Traffic Control Devices. No waiving of these requirements will be allowed without prior written approval of the Engineer.

The Contractor shall protect all workers engaged in the project, and shall provide for safe and convenient public travel by providing adequate traffic control under all circumstances. Such circumstances may include, but not be limited to work performed along the route under construction, road closures for construction operations of any type, or when any section of the road is opened to traffic prior to completion of all work. The Contractor shall ensure that work zone in question is properly signed, barricaded and otherwise marked.

The contractor will be responsible for the proper location, installation, and arrangement of all traffic control devices during the period of construction. All open excavations shall be protected by Type I barricades equipped with working bi-directional flashing lights at each end of the excavation, as well as at 50-foot intervals between ends for excavations greater than 50 feet in length and weighted down by **one sandbag per each barricade**. All street closures shall be protected by Type III barricades equipped with working bi-directional flashing lights and weighted down by **eight sandbags per each barricade**.

The Contractor shall plan his work so that there will be no open excavations during non-working hours and that all barricades not necessary have been removed from the pavement during non-working hours.

In the event that one direction of vehicular travel must be closed, the Contractor has the option of setting up a detour route or using flaggers (minimum of two) to direct traffic around the work area. The Engineer shall approve proper signing and barricading of the detour route and lane closures, and shall issue written authorization prior to closure.

In the event that both directions of vehicular travel must be closed, the Contractor shall set up a detour route to direct traffic around the work area. The Engineer shall approve proper signing and barricading of the detour route and shall issue written authorization prior to closure.

The Contractor shall maintain his operations in a manner such that traffic flow shall not be substantially impeded during the construction of the proposed improvements. Where traffic must cross open trenches during a given work day, the Contractor shall provide steel plates at street intersections and driveways. Prior to the end of a given work day, the pavement surface shall be temporarily restored.

No open excavation may be left overnight or on the weekend without the express written permission of the Engineer.

No street closure shall be permitted without the express written permission of the Engineer. No street closure may exceed 800 linear feet, nor be in effect from Friday night at 4:30PM to Monday morning at 9:00AM. Where it is necessary to establish a temporary detour, all the requirements of the Standard Specifications and MUTCD shall be met.

As the condition and location of the work changes, the Contractor shall maintain all traffic control devices and personnel engaged in traffic control, in a manner that will accommodate the changing particulars of the work at any given time. Advance warnings, detour and directional information and other controls or directions necessary for safe passage of traffic around the work site shall be reviewed and changed, if necessary, to meet the needs of the situation. Signage erected, but not necessary or proper for the situation ahead shall be covered or taken down. Barricading and signage shall be monitored by the Contractor on a daily basis to ensure that it meets the requirements for work zone safety for the conditions of the particular work being performed.

The Contractor shall provide a name and phone number of a responsible party capable of providing emergency service, 24 hours per day, for the duration of the Project.

**DEFICIENCY CHARGE:**

The primary concern of the Village is to maintain a safe travel way for the public and a safe environment for the work in the construction zone. The Contractor is expected to comply with the Standard Specifications, contract plans, the Special Provisions and directions from the Engineer concerning traffic control and protection. The Contractor shall provide a telephone number where a responsible individual can be contacted on a 24-hour-a-day basis to receive notification of any deficiencies regarding traffic control and protection. The Contractor shall immediately respond correcting traffic control deficiencies by dispatching workers, materials and equipment to correct such deficiencies.

Failure to comply with directions from the Engineer for corrections or modifications to the traffic control and protection will result in a deduction in accordance with Article 105.03. This charge is separate from the cost of any corrective work ordered. The Contractor shall not be relieved of any contractual responsibilities by the Village's actions.

Basis of Payment: This work shall be paid for at the contract Lump Sum price for TRAFFIC CONTROL, MAINTENANCE OF TRAFFIC which price shall be payment in full for the installation and maintenance of proper traffic control to protect the work and public for the duration of the Project.

## 30 HOT-MIX ASPHALT BINDER AND SURFACE COURSE

This item shall be done in accordance with all applicable parts of Sections 406 and 1030 of the SSRBC, the included D-1 and BDE Specifications, and included mix table.

All preparation of the existing base shall be considered incidental to its respective pay item. This shall include but not be limited to cleaning cracks with an air compressor or other approved method prior to placement of mixture for cracks, joints and flangeways.

The target value for the air voids of the Hot-Mix Asphalt Surface Course, Mix D, N50 shall be 3.5% at the design number of gyrations.

Basis of Payment: Tack Coat shall be paid for at the contract unit price per Pound of residual asphalt applied for BITUMINOUS MATERIALS (TACK COAT).

The HMA surfacing shall be paid for at the contract unit price per Ton for HOT-MIX ASPHALT BINDER COURSE, IL-19.0, N50, and LEVELING BINDER (MACHINE METHOD), N50, and HOT-MIX ASPHALT SURFACE COURSE, MIX D, N50.

## 31 IEPA CLEAN CONSTRUCTION AND DEMOLITION DEBRIS

**Description:** If construction activities will result in removal and disposal of excavation spoils, per Illinois Public Act 96-1416 and the Illinois Environmental Protection Agency, soil sampling and analysis, along with certification from a licensed professional engineer (PE) or licensed professional geologist (PG) that the soil is uncontaminated, will be required prior to clean construction and demolition debris (CCDD) facility acceptance. However, if the subject property has never been used for industrial or commercial purposes, and is not adjacent to Potentially Impacted Properties (PIP's), then the site owner or operator may certify that the soil is uncontaminated by use of IEPA form LPC-662.

To facilitate meeting the above requirements, the Village will supply a signed LPC-663 or LPC-662 form. Neither the LPC-663/662, nor the report shall be considered a guarantee that excavated material shall meet the requirements of Illinois Public Act 96-1416, and the Contractor shall be responsible for satisfactory removal and disposal of all material as specified herein. No additional environmental testing of the existing on-site material may be performed without prior written permission from the Engineer. In the event that Contractor performs any additional testing without the written permission of the Engineer, Contractor will be required to properly and legally dispose of all material from the project site, regardless of its suitability for disposal in a CCDD facility, at his own expense, without any additional payment for testing, hauling and disposal as specified below.

The Village anticipates that one or more of the following CCDD facilities will accept material from this project:

- Reliable Lyons CCDD, 4226 Lawndale Ave, Lyons, IL 60534
- Hanson Material Service, 125 N Independence Blvd Romeoville, IL 60446
- Bluff City Materials, 1245 Gifford Rd, Elgin, IL 60120
- Vulcan Materials, 5500 Joliet Rd, McCook, IL 60525

Contractor shall consult with these facilities prior to submitting a bid for this project. Contractor shall base his bid on hauling all CCDD generated by this project to these facilities. No additional compensation will be allowed for hauling to any other facilities, for any reason, unless none of the above listed facilities will accept the material. If an alternate facility was approved by the Village prior to bid submittal, and that facility will no longer accept the material, the facilities listed above shall be used by the Contractor at no additional cost to the Village, unless none of the above facilities will accept the material. In the case where neither any of the above listed facilities, nor a pre-approved alternate facility, will accept the material, the Village and Contractor shall attempt to locate an alternate facility, unless the material is classified as unsuitable for disposal in a CCDD facility, in which case it shall be hauled to a landfill and paid for as specified below. Should the Contractor wish to haul material to an alternate facility, the name, location and contact information for the proposed facility shall be submitted to the Village for evaluation, a minimum of five (5) calendar days prior to submission of a bid. Any costs associated with additional sampling, analysis, and/or reporting to meet the acceptance requirements of the alternate facility shall be borne by the bidding Contractor and included within the Contractor's bid. By submitting a bid, Contractor agrees that at least one (1) of the above listed facilities, or an alternate facility approved by the Village in writing prior to the submission of the bid, will accept the material and shall be used for disposal of all CCDD from this project, unless otherwise determined to be non-hazardous special waste as specified below. In the event that the Contractor needs to alter the CCDD facility used for placement of excavated material, the Contractor shall notify the Engineer no later than three (3) days in advance of the planned alteration. In no event shall material be hauled to an alternate facility without the written permission of the Engineer.

**Construction Requirements:** The Contractor shall be responsible for satisfactory removal and disposal of all waste material, asphalt, concrete, stone, dirt, and debris generated or discovered in the course of the work. Removal and disposal of excavation items being disposed of at a clean construction and demolition debris (CCDD) facility shall meet the requirements of Public Act 96-1416. This work shall be incidental and shall not be paid for separately, with the exception of the **ADDITIONAL HAULING SURCHARGE, NON-HAZARDOUS SPECIAL WASTE** as specified below.

The temporary storing of excavated materials within the public right-of-way or project limits shall not be allowed unless approved by the Engineer. It shall be the Contractor's responsibility to find an approved dumpsite for debris and any excavated materials. The Village will not provide one.

The Contractor shall employ a licensed testing firm, as approved by Engineer, to screen each truck-load of material on-site, using a PID or FID field screen or other acceptable method. The PID shall be calibrated on a daily basis. The Contractor shall enter all truck-loads leaving the site into an on-site screening log including, but not limited to, project name, date, time, weather conditions, name of screener, hauling company, truck number, screening method, background PID reading, calibrated PID reading, truck/bucket PID reading, and description of materials screened. Each day prior to the first truck leaving the site, Engineer and Contractor's testing consultant shall agree on the allowable PID reading in accordance with the receiving CCDD facility procedures (typically 0.0 or daily background levels). The receiving CCDD facility may be consulted daily, or periodically, as needed to verify that the appropriate value is being used. If said screen indicates levels that will be unacceptable for disposal at the CCDD facility, the material shall be quarantined on-site for further evaluation. If material is rejected at the CCDD facility, it shall be returned to the project site and quarantined for further evaluation. No additional compensation shall be allowed for returning a rejected load back to the project site, or any other additional hauling, loading, unloading, etc, as may be required. Should it be determined by the Village or Village's agent that the material is not suitable for disposal in a CCDD facility, the Contractor shall be responsible for properly disposing of the material at an acceptable landfill, and providing the Village with all of the proper paperwork to document the material disposal with the IEPA. This work shall be paid for as specified below. If a truck-load is rejected by a CCDD facility after leaving the project site, and said truck-load is not identified in the on-site screening log, the Contractor shall still be required to properly dispose of the material and provide the Village with the necessary documentation, but shall not be additionally compensated as specified below.

All additional work to satisfy these requirements shall be the responsibility of the Contractor. All costs associated with meeting these requirements shall be paid for as specified herein. These costs shall include but are not limited to all required testing, lab analysis, and certification by a licensed professional engineer (PE) or licensed professional geologist (PG), if required, in addition to the cost of additional hauling, dump fees, etc. Payment for this work shall be in addition to payment for EARTH EXCAVATION per the contract unit price. No adjustment to the contract unit price will be allowed due to changes to quantities based on actual field conditions.

**Basis of Payment:** This work shall be paid for at the contract unit price per Load for **ADDITIONAL HAULING SURCHARGE, NON-HAZARDOUS SPECIAL WASTE,** which price shall be payment in full for the work as specified herein.

SPECIAL PROVISION
FOR
CONSTRUCTION DEBRIS

Effective October 18, 1999

Add the following to the third paragraph of Article 202.03 of the Standard Specifications:

"The Contractor shall not conduct any generation, transportation, or recycling of construction or demolition debris, clean or general or uncontaminated soil generated during construction, remodeling, repair, and demolition of utilities, structures, and roads that is not commingled with any waste, without the maintenance of documentation identifying the hauler, generator, place of origin of the debris or soil, the weight or volume of the debris or soil, and the location, owner, and operator of the facility where the debris or soil was transferred , disposed, recycled or treated. This documentation must be maintained by the Contractor for 3 years."

\\DIST1NTFS2\LocGen\Wp2\MFT Form Letters\MFT FORM TEMPLATES\Constructions Debris Special Provision.doc

**ADJUSTMENTS AND RECONSTRUCTIONS**
Effective: March 15, 2011

Revise the first paragraph of Article 602.04 to read:

"**602.04 Concrete.** Cast-in-place concrete for structures shall be constructed of Class SI concrete according to the applicable portions of Section 503. Cast-in-place concrete for pavement patching around adjustments and reconstructions shall be constructed of Class PP-1 concrete, unless otherwise noted in the plans, according to the applicable portions of Section 1020."

Revise the third, fourth and fifth sentences of the second paragraph of Article 602.11(c) to read:

"Castings shall be set to the finished pavement elevation so that no subsequent adjustment will be necessary, and the space around the casting shall be filled with Class PP-1 concrete, unless otherwise noted in the plans, to the elevation of the surface of the base course or binder course. HMA surface or binder course material shall not be allowed. The pavement may be opened to traffic according to Article 701.17(e)(3)b."

Revise Article 603.05 to read:

"**603.05 Replacement of Existing Flexible Pavement.** After the castings have been adjusted, the surrounding space shall be filled with Class PP-1 concrete, unless otherwise noted in the plans, to the elevation of the surface of the base course or binder course. HMA surface or binder course material shall not be allowed. The pavement may be opened to traffic according to Article 701.17(e)(3)b."

Revise Article 603.06 to read:

"**603.06 Replacement of Existing Rigid Pavement.** After the castings have been adjusted, the pavement and HMA that was removed, shall be replaced with Class PP-1 concrete, unless otherwise noted in the plans, not less than 9 in. (225 mm) thick. The pavement may be opened to traffic according to Article 701.17(e)(3)b.

The surface of the Class PP concrete shall be constructed flush with the adjacent surface."

Revise the first sentence of Article 603.07 to read:

"**603.07 Protection Under Traffic.** After the casting has been adjusted and the Class PP concrete has been placed, the work shall be protected by a barricade and two lights according to Article 701.17(e)(3)b."

**DRAINAGE AND INLET PROTECTION UNDER TRAFFIC (DISTRICT 1)**

Effective: April 1, 2011
Revised: April 2, 2011

Add the following to Article 603.02 of the Standard Specifications:

"(i) Temporary Hot-Mix Asphalt (HMA) Ramp (Note 1) ..... 1030
(j) Temporary Rubber Ramps (Note 2)

Note 1. The HMA shall have maximum aggregate size of 3/8 in. (95 mm).

Note 2. The rubber material shall be according to the following.

| Property | Test Method | Requirement |
|---|---|---|
| Durometer Hardness, Shore A | ASTM D 2240 | 75 ±15 |
| Tensile Strength, psi (kPa) | ASTM D 412 | 300 (2000) min |
| Elongation, percent | ASTM D 412 | 90 min |
| Specific Gravity | ASTM D 792 | 1.0 - 1.3 |
| Brittleness, °F (°C) | ASTM D 746 | -40 (-40)" |

Revise Article 603.07 of the Standard Specifications to read:

"**603.07 Protection Under Traffic.** After the casting has been adjusted and the Class PP concrete has been placed, the work shall be protected by a barricade and two lights according to Article 701.17(e)(3)b.

When castings are under traffic before the final surfacing operation has been started, properly sized temporary ramps shall be placed around the drainage and/or utility castings according to the following methods.

(a) Temporary Asphalt Ramps. Temporary hot-mix asphalt ramps shall be placed around the casting, flush with its surface and decreasing to a featheredge in a distance of 2 ft (600 mm) around the entire surface of the casting.

(b) Temporary Rubber Ramps. Temporary rubber ramps shall only be used on roadways with permanent posted speeds of 40 mph or less and when the height of the casting to be protected meets the proper sizing requirements for the rubber ramps as shown below.

| Dimension | Requirement |
|---|---|
| Inside Opening | Outside dimensions of casting + 1 in. (25 mm) |

| | |
|---|---|
| Thickness at inside edge | Height of casting ± 1/4 in. (6 mm) |
| Thickness at outside edge | 1/4 in. (6 mm) max. |
| Width, measured from inside opening to outside edge | 8 1/2 in. (215 mm) min |

Placement shall be according to the manufacturer's specifications.

Temporary ramps for castings shall remain in place until surfacing operations are undertaken within the immediate area of the structure. Prior to placing the surface course, the temporary ramp shall be removed. Excess material shall be disposed of according to Article 202.03."

**FRICTION AGGREGATE (D-1)**

Effective: January 1, 2011
Revised: April 29, 2016

Revise Article 1004.03(a) of the Standard Specifications to read:

"**1004.03 Coarse Aggregate for Hot-Mix Asphalt (HMA).** The aggregate shall be according to Article 1004.01 and the following.

(a) Description. The coarse aggregate for HMA shall be according to the following table.

| Use | Mixture | Aggregates Allowed |
|---|---|---|
| Class A | Seal or Cover | Allowed Alone or in Combination [5/]:<br>Gravel<br>Crushed Gravel<br>Carbonate Crushed Stone<br>Crystalline Crushed Stone<br>Crushed Sandstone<br>Crushed Slag (ACBF)<br>Crushed Steel Slag<br>Crushed Concrete |
| HMA<br>Low ESAL | Stabilized Subbase or Shoulders | Allowed Alone or in Combination [5/]:<br>Gravel<br>Crushed Gravel<br>Carbonate Crushed Stone<br>Crystalline Crushed Stone<br>Crushed Sandstone<br>Crushed Slag (ACBF)<br>Crushed Steel Slag[1/]<br>Crushed Concrete |
| HMA<br>High ESAL<br>Low ESAL | Binder<br>IL-19.0<br>or IL-19.0L<br><br>SMA Binder | Allowed Alone or in Combination [5/ 6/]:<br>Crushed Gravel<br>Carbonate Crushed Stone[2/]<br>Crystalline Crushed Stone<br>Crushed Sandstone<br>Crushed Slag (ACBF)<br>Crushed Concrete[3/] |

| Use | Mixture | Aggregates Allowed | |
|---|---|---|---|
| HMA<br>High ESAL<br>Low ESAL | C Surface and Leveling Binder IL-9.5 or IL-9.5L<br><br>SMA<br>Ndesign 50<br>Surface | Allowed Alone or in Combination [5/]:<br><br>Crushed Gravel<br>Carbonate Crushed Stone[2/]<br>Crystalline Crushed Stone<br>Crushed Sandstone<br>Crushed Slag (ACBF)<br>Crushed Steel Slag[4/]<br>Crushed Concrete[3/] | |
| HMA<br>High ESAL | D Surface and Leveling Binder IL-9.5<br><br>SMA<br>Ndesign 50<br>Surface | Allowed Alone or in Combination [5/]:<br><br>Crushed Gravel<br>Carbonate Crushed Stone (other than Limestone)[2/]<br>Crystalline Crushed Stone<br>Crushed Sandstone<br>Crushed Slag (ACBF)<br>Crushed Steel Slag[4/]<br>Crushed Concrete[3/] | |
| | | Other Combinations Allowed: | |
| | | *Up to...* | *With...* |
| | | 25% Limestone | Dolomite |
| | | 50% Limestone | Any Mixture D aggregate other than Dolomite |
| | | 75% Limestone | Crushed Slag (ACBF) or Crushed Sandstone |
| HMA<br>High ESAL | E Surface<br>IL-9.5<br><br>SMA<br>Ndesign 80<br>Surface | Allowed Alone or in Combination [5/ 6/]:<br><br>Crystalline Crushed Stone<br>Crushed Sandstone<br>Crushed Slag (ACBF)<br>Crushed Steel Slag<br><br>No Limestone. | |
| | | Other Combinations Allowed: | |
| | | *Up to...* | *With...* |

| Use | Mixture | Aggregates Allowed | |
|---|---|---|---|
| | | 50% Dolomite[2/] | Any Mixture E aggregate |
| | | 75% Dolomite[2/] | Crushed Sandstone, Crushed Slag (ACBF), Crushed Steel Slag, or Crystalline Crushed Stone |
| | | 75% Crushed Gravel[2/] or Crushed Concrete[3/] | Crushed Sandstone, Crystalline Crushed Stone, Crushed Slag (ACBF), or Crushed Steel Slag |
| HMA High ESAL | F Surface IL-9.5<br><br>SMA Ndesign 80 Surface | <u>Allowed Alone or in Combination</u> [5/ 6/]:<br><br>Crystalline Crushed Stone<br>Crushed Sandstone<br>Crushed Slag (ACBF)<br>Crushed Steel Slag<br>No Limestone. | |
| | | <u>Other Combinations Allowed</u>: | |
| | | *Up to...* | *With...* |
| | | 50% Crushed Gravel[2/], Crushed Concrete[3/], or Dolomite[2/] | Crushed Sandstone, Crushed Slag (ACBF), Crushed Steel Slag, or Crystalline Crushed Stone |

1/ Crushed steel slag allowed in shoulder surface only.
2/ Carbonate crushed stone (limestone) and/or crushed gravel shall not be used in SMA Ndesign 80. In SMA Ndesign 50, carbonate crushed stone shall not be blended with any of the other aggregates allowed alone in Ndesign 50 SMA binder or Ndesign 50 SMA surface.
3/ Crushed concrete will not be permitted in SMA mixes.
4/ Crushed steel slag shall not be used as leveling binder.
5/ When combinations of aggregates are used, the blend percent measurements shall be by volume."
6/ Combining different types of aggregate will not be permitted in SMA Ndesign 80."

**HMA MIXTURE DESIGN REQUIREMENTS (D-1)**

Effective: January 1, 2013
Revised: April 1, 2016

**1) Design Composition and Volumetric Requirements**

Revise the table in Article 406.06(d) of the Standard Specifications to read:

| "MINIMUM COMPACTED LIFT THICKNESS | |
|---|---|
| Mixture Composition | Thickness, in. (mm) |
| IL-4.75 | 3/4 (19) |
| SMA-9.5, IL-9.5, IL-9.5L | 1 1/2 (38) |
| SMA-12.5 | 2 (50) |
| IL-19.0, IL-19.0L | 2 1/4 (57)" |

Revise the table in Article 1004.03(c) of the Standard Specifications to read:

| "Use | Size/Application | Gradation No. |
|---|---|---|
| Class A-1, 2, & 3 | 3/8 in. (10 mm) Seal | CA 16 |
| Class A-1 | 1/2 in. (13 mm) Seal | CA 15 |
| Class A-2 & 3 | Cover | CA 14 |
| HMA High ESAL | IL-19.0<br>IL-9.5 | CA 11 1/<br>CA 16, CA 13 3/ |
| HMA Low ESAL | IL-19.0L<br>IL-9.5L<br>Stabilized Subbase or Shoulders | CA 11 1/<br>CA 16 |
| SMA 2/ | 1/2 in. (12.5mm) Binder & Surface<br>IL 9.5 Surface | CA13 3/, CA14 or CA16<br>CA16, CA 13 3/ |

1/ CA 16 or CA 13 may be blended with the gradations listed.
2/ The coarse aggregates used shall be capable of being combined with stone sand, slag sand, or steel slag sand meeting the FA/FM 20 gradation and mineral filler to meet the approved mix design and the mix requirements noted herein.
3/ CA 13 shall be 100 percent passing the 1/2 in. (12.5mm) sieve.

Revise Article 1004.03(e) of the Supplemental Specifications to read:

"(e) Absorption. For SMA the coarse aggregate shall also have water absorption ≤ 2.0 percent."

Revise the last paragraph of Article 1102.01 (a) (5) of the Standard Specifications to read:

"IL-4.75 and Stone Matrix Asphalt (SMA) mixtures which contain aggregate having absorptions greater than or equal to 2.0 percent, or which contain steal slag sand, shall have minimum surge bin storage plus haul time of 1.5 hours."

Revise the nomenclature table in Article 1030.01 of the Standard Specifications to read:

| | |
|---|---|
| "High ESAL | IL-19.0 binder; IL-9.5 surface; IL-4.75; SMA-12.5, SMA-9.5 |
| Low ESAL | IL-19.0L binder; IL-9.5L surface; Stabilized Subbase (HMA)[1/]; HMA Shoulders[2/] |

1/ Uses 19.0L binder mix.

2/ Uses 19.0L for lower lifts and 9.5L for surface lift."

Revise Article 1030.02 of the Standard Specifications and Supplemental Specifications to read:

"**1030.02 Materials.** Materials shall be according to the following.

| Item | Article/Section |
|---|---|
| (a) Coarse Aggregate | 1004.03 |
| (b) Fine Aggregate | 1003.03 |
| (c) RAP Material | 1031 |
| (d) Mineral Filler | 1011 |
| (e) Hydrated Lime | 1012.01 |
| (f) Slaked Quicklime (Note 1) | |
| (g) Performance Graded Asphalt Binder (Note 2) | 1032 |
| (h) Fibers (Note 3) | |
| (i) Warm Mix Asphalt (WMA) Technologies (Note 4) | |

Note 1. Slaked quicklime shall be according to ASTM C 5.

Note 2. The asphalt binder shall be an SBS PG 76-28 when the SMA is used on a full-depth asphalt pavement and SBS PG 76-22 when used as an overlay, except where modified herein. The asphalt binder shall be an Elvaloy or SBS PG 76-22 for IL-4.75, except where modified herein. The elastic recovery shall be a minimum of 80.

Note 3. A stabilizing additive such as cellulose or mineral fiber shall be added to the SMA mixture according to Illinois Modified AASHTO M 325. The stabilizing additive shall meet the Fiber Quality Requirements listed in Illinois Modified AASHTO M 325. Prior to approval and use of fibers, the Contractor shall submit a notarized certification by the producer of these materials stating they meet these requirements. Reclaimed Asphalt Shingles (RAS) may be used in Stone Matrix Asphalt (SMA) mixtures designed with an SBA polymer modifier as a fiber additive if the mix design with RAS included meets AASHTO T305 requirements. The RAS shall be from a certified source that

produces either Type I or Type 2. Material shall meet requirements noted herein and the actual dosage rate will be determined by the Engineer.

Note 4. Warm mix additives or foaming processes shall be selected from the current Bureau of Materials and Physical Research Approved List, "Warm Mix Asphalt Technologies"."

Revise Article 1030.04(a)(1) of the Standard Specifications and the Supplemental Specifications to read:

"(1) High ESAL Mixtures. The Job Mix Formula (JMF) shall fall within the following limits.

| High ESAL, MIXTURE COMPOSITION (% PASSING) 1/ | | | | | | | | | | |
|---|---|---|---|---|---|---|---|---|---|---|
| Sieve Size | IL-19.0 mm | | SMA 4/ IL-12.5 mm | | SMA 4/ IL-9.5 mm | | IL-9.5 mm | | IL-4.75 mm | |
| | min | max | min | max | min | max | min | max | min | max |
| 1 1/2 in (37.5 mm) | | | | | | | | | | |
| 1 in. (25 mm) | | 100 | | | | | | | | |
| 3/4 in. (19 mm) | 90 | 100 | | 100 | | | | | | |
| 1/2 in. (12.5 mm) | 75 | 89 | 80 | 100 | | 100 | | 100 | | 100 |
| 3/8 in. (9.5 mm) | | | | 65 | 90 | 100 | 90 | 100 | | 100 |
| #4 (4.75 mm) | 40 | 60 | 20 | 30 | 36 | 50 | 34 | 69 | 90 | 100 |
| #8 (2.36 mm) | 20 | 42 | 16 | 24 5/ | 16 | 32 5/ | 34 6/ | 52 2/ | 70 | 90 |
| #16 (1.18 mm) | 15 | 30 | | | | | 10 | 32 | 50 | 65 |
| #30 (600 µm) | | | 12 | 16 | 12 | 18 | | | | |
| #50 (300 µm) | 6 | 15 | | | | | 4 | 15 | 15 | 30 |
| #100 (150 µm) | 4 | 9 | | | | | 3 | 10 | 10 | 18 |
| #200 (75 µm) | 3 | 6 | 7.0 | 9.0 3/ | 7.5 | 9.5 3/ | 4 | 6 | 7 | 9 3/ |
| Ratio Dust/Asphalt Binder | | 1.0 | | 1.5 | | 1.5 | | 1.0 | | 1.0 |

1/ Based on percent of total aggregate weight.

2/ The mixture composition shall not exceed 44 percent passing the #8 (2.36 mm) sieve for surface courses with Ndesign = 90.

3/ Additional minus No. 200 (0.075 mm) material required by the mix design shall be mineral filler, unless otherwise approved by the Engineer.

4/ The maximum percent passing the #635 (20 µm) sieve shall be ≤ 3 percent.

5/ When establishing the Adjusted Job Mix Formula (AJMF) the percent passing the #8 (2.36 mm) sieve shall not be adjusted above the percentage stated on the table.

6/ When establishing the Adjusted Job Mix Formula (AJMF) the percent passing the #8 (2.36 mm) sieve shall not be adjusted below 34 percent.

Revise Article 1030.04(b)(1) of the Standard Specifications to read:

"(1) High ESAL Mixtures. The target value for the air voids of the HMA shall be 4.0 percent and for IL-4.75 it shall be 3.5 percent at the design number of gyrations. The VMA and VFA of the HMA design shall be based on the nominal maximum size of the aggregate in the mix, and shall conform to the following requirements.

| VOLUMETRIC REQUIREMENTS High ESAL | | | | |
|---|---|---|---|---|
| | Voids in the Mineral Aggregate (VMA), % minimum | | | Voids Filled with Asphalt Binder (VFA), % |
| Ndesign | IL-19.0 | IL-9.5 | IL-4.75 1/ | |
| 50 | 13.5 | 15.0 | 18.5 | 65 – 78 2/ |
| 70 | | | | 65 - 75 |
| 90 | | | | |

1/ Maximum Draindown for IL-4.75 shall be 0.3 percent

2/ VFA for IL-4.75 shall be 72-85 percent"

Replace Article 1030.04(b)(3) of the Standard Specifications with the following:

"(3) SMA Mixtures.

| Volumetric Requirements SMA 1/ | | | |
|---|---|---|---|
| Ndesign | Design Air Voids Target % | Voids in the Mineral Aggregate (VMA), % min. | Voids Filled with Asphalt (VFA), % |
| 80 4/ | 3.5 | 17.0 2/ | 75 - 83 |
| | | 16.0 3/ | |

1/ Maximum draindown shall be 0.3 percent. The draindown shall be determined at the JMF asphalt binder content at the mixing temperature plus 30 °F.

2/ Applies when specific gravity of coarse aggregate is ≥ 2.760.

3/ Applies when specific gravity of coarse aggregate is < 2.760.

4/ Blending of different types of aggregate will not be permitted.
For surface course, the coarse aggregate can be crushed steel slag, crystalline crushed stone or crushed sandstone. For binder course, coarse aggregate shall be crushed stone (dolomite), crushed gravel, crystalline crushed stone, or crushed sandstone.

Add to the end of Article 1030.05 (d) (2) a. of the Standard Specifications:

"During production, the Contractor shall test SMA mixtures for draindown according to AASHTO T305 at a frequency of 1 per day of production."

Delete last sentence of the second paragraph of Article 1102.01(a) (4) b. 2.

Add to the end of Article 1102.01 (a) (4) b. 2.:

"As an option, collected dust (baghouse) may be used in lieu of manufactured mineral filler according to the following:

(a.) Sufficient collected dust (baghouse) is available for production of the SMA mix for the entire project.

(b.) A mix design was prepared based on collected dust (baghouse).

**2) Design Verification and Production**

Revise Article 1030.04 (d) of the Standard Specifications to read:

"(d) Verification Testing. High ESAL, IL-4.75, and SMA mix designs submitted for verification will be tested to ensure that the resulting mix designs will pass the required criteria for the Hamburg Wheel Test (IL mod AASHTO T-324) and the Tensile Strength Test (IL mod AASHTO T-283). The Department will perform a verification test on gyratory specimens compacted by the Contractor. If the mix fails the Department's verification test, the Contractor shall make the necessary changes to the mix and resubmit compacted specimens to the Department for verification. If the mix fails again, the mix design will be rejected.

All new and renewal mix designs will be required to be tested, prior to submittal for Department verification and shall meet the following requirements:

(1)Hamburg Wheel Test criteria. The maximum allowable rut depth shall be 0.5 in. (12.5 mm). The minimum number of wheel passes at the 0.5 in. (12.5 mm) rut depth criteria shall be based on the high temperature binder grade of the mix as specified in the mix requirements table of the plans.

Illinois Modified AASHTO T 324 Requirements [1/]

| Asphalt Binder Grade | # Repetitions | Max Rut Depth (mm) |
|---|---|---|
| PG 70 -XX (or higher) | 20,000 | 12.5 |
| PG 64 -XX (or lower) | 10,000 | 12.5 |

1/ When produced at temperatures of 275 ± 5 °F (135 ± 3 °C) or less, loose Warm Mix Asphalt shall be oven aged at 270 ± 5 °F (132 ± 3 °C) for two hours prior to gyratory compaction of Hamburg Wheel specimens.

Note: For SMA Designs (N-80) the maximum rut depth is 6.0 mm at 20,000 repetitions.
For IL 4.75mm Designs (N-50) the maximum rut depth is 9.0mm at 15,000 repetitions.

(2) Tensile Strength Criteria. The minimum allowable conditioned tensile strength shall be 60 psi (415 kPa) for non-polymer modified performance graded (PG) asphalt binder and 80 psi (550 kPa) for polymer modified PG asphalt binder. The maximum allowable unconditioned tensile strength shall be 200 psi (1380 kPa)."

Production Testing. Revise first paragraph of Article 1030.06(a) of the Standard Specifications to read:

"(a) High ESAL, IL-4.75, WMA, and SMA Mixtures. For each contract, a 300 ton (275 metric tons) test strip, except for SMA mixtures it will be 400 ton (363 metric ton), will be required at the beginning of HMA production for each mixture with a quantity of 3000 tons (2750 metric tons) or more according to the Manual of Test Procedures for Materials "Hot Mix Asphalt Test Strip Procedures".

Add the following after the sixth paragraph in Article 1030.06 (a) of the Standard Specifications:

"The Hamburg Wheel test shall also be conducted on all HMA mixtures from a sample taken within the first 500 tons (450 metric tons) on the first day of production or during start up with a split reserved for the Department. The mix sample shall be tested according to the Illinois Modified AASHTO T 324 and shall meet the requirements specified herein. Mix production shall not exceed 1500 tons (1350 metric tons) or one day's production, whichever comes first, until the testing is completed and the mixture is found to be in conformance. The requirement to cease mix production may be waived if the plant produced mixture demonstrates conformance prior to start of mix production for a contract.
If the mixture fails to meet the Hamburg Wheel criteria, no further mixture will be accepted until the Contractor takes such action as is necessary to furnish a mixture meeting the criteria"

Method of Measurement:

Add the following after the fourth paragraph of Article 406.13 (b):

"The plan quantities of SMA mixtures shall be adjusted using the actual approved binder and surface Mix Design's $G_{mb}$."

Basis of Payment.

Replace the fourth paragraph of Article 406.14 of the Standard Specifications with the following:

"Stone matrix asphalt will be paid for at the contract unit price per ton (metric ton) for POLYMERIZED HOT-MIX ASPHALT SURFACE COURSE, STONE MATRIX ASPHALT, of the mixture composition and Ndesign specified; and POLYMERIZED HOT-MIX ASPHALT BINDER COURSE, STONE MATRIX ASPHALT, of the mixture composition and Ndesign specified."

## RECLAIMED ASPHALT PAVEMENT AND RECLAIMED ASPHALT SHINGLES (D-1)

Effective: November 1, 2012
Revise: April 1, 2017

Revise Section 1031 of the Standard Specifications to read:

### "SECTION 1031. RECLAIMED ASPHALT PAVEMENT AND RECLAIMED ASPHALT SHINGLES

**1031.01 Description.** Reclaimed asphalt pavement and reclaimed asphalt shingles shall be according to the following.

(a) Reclaimed Asphalt Pavement (RAP). RAP is the material resulting from cold milling or crushing an existing hot-mix asphalt (HMA) pavement. RAP will be considered processed FRAP after completion of both crushing and screening to size. The Contractor shall supply written documentation that the RAP originated from routes or airfields under federal, state, or local agency jurisdiction.

(b) Reclaimed Asphalt Shingles (RAS). Reclaimed asphalt shingles (RAS). RAS is from the processing and grinding of preconsumer or post-consumer shingles. RAS shall be a clean and uniform material with a maximum of 0.5 percent unacceptable material, as defined in Bureau of Materials and Physical Research Policy Memorandum, "Reclaimed Asphalt Shingle (RAS) Sources", by weight of RAS. All RAS used shall come from a Bureau of Materials and Physical Research approved processing facility where it shall be ground and processed to 100 percent passing the 3/8 in. (9.5 mm) sieve and 90 percent passing the #4 (4.75 mm) sieve. RAS shall meet the testing requirements specified herein. In addition, RAS shall meet the following Type 1 or Type 2 requirements.

(1) Type 1. Type 1 RAS shall be processed, preconsumer asphalt shingles salvaged from the manufacture of residential asphalt roofing shingles.

(2) Type 2. Type 2 RAS shall be processed post-consumer shingles only, salvaged from residential, or four unit or less dwellings not subject to the National Emission Standards for Hazardous Air Pollutants (NESHAP).

**1031.02 Stockpiles.** RAP and RAS stockpiles shall be according to the following.

(a) RAP Stockpiles. The Contractor shall construct individual, sealed RAP stockpiles meeting one of the following definitions. Additional processed RAP (FRAP) shall be stockpiled in a separate working pile, as designated in the QC Plan, and only added to the sealed stockpile when test results for the working pile are complete and are found to meet tolerances specified herein for the original sealed FRAP stockpile. Stockpiles shall be sufficiently separated to prevent intermingling at the base. All stockpiles (including

unprocessed RAP and FRAP) shall be identified by signs indicating the type as listed below (i.e. "Non- Quality, FRAP -#4 or Type 2 RAS", etc...).

(1) Fractionated RAP (FRAP). FRAP shall consist of RAP from Class I, Superpave HMA (High and Low ESAL) or equivalent mixtures. The coarse aggregate in FRAP shall be crushed aggregate and may represent more than one aggregate type and/or quality, but shall be at least C quality. All FRAP shall be processed prior to testing and sized into fractions with the separation occurring on or between the #4 (4.75 mm) and 1/2 in. (12.5 mm) sieves. Agglomerations shall be minimized such that 100 percent of the RAP in the coarse fraction shall pass the maximum sieve size specified for the mix the FRAP will be used in.

(2) Restricted FRAP (B quality) stockpiles shall consist of RAP from Class I, Superpave (High ESAL), or HMA (High ESAL). If approved by the Engineer, the aggregate from a maximum 3.0 in. (75 mm) single combined pass of surface/binder milling will be classified as B quality. All millings from this application will be processed into FRAP as described previously.

(3) Conglomerate. Conglomerate RAP stockpiles shall consist of RAP from Class I, Superpave HMA (High and Low ESAL) or equivalent mixtures. The coarse aggregate in this RAP shall be crushed aggregate and may represent more than one aggregate type and/or quality, but shall be at least C quality. This RAP may have an inconsistent gradation and/or asphalt binder content prior to processing. All conglomerate RAP shall be processed (FRAP) prior to testing. Conglomerate RAP stockpiles shall not contain steel slag or other expansive material as determined by the Department.

(4) Conglomerate "D" Quality (DQ). Conglomerate DQ RAP stockpiles shall consist of RAP from HMA shoulders, bituminous stabilized subbases or Superpave (Low ESAL)/HMA (Low ESAL) IL-19.0L binder mixture. The coarse aggregate in this RAP may be crushed or round but shall be at least D quality. This RAP may have an inconsistent gradation and/or asphalt binder content. Conglomerate DQ RAP stockpiles shall not contain steel slag or other expansive material as determined by the Department.

(5) Non-Quality. RAP stockpiles that do not meet the requirements of the stockpile categories listed above shall be classified as "Non-Quality".

RAP or FRAP containing contaminants, such as earth, brick, sand, concrete, sheet asphalt, bituminous surface treatment (i.e. chip seal), pavement fabric, joint sealants, plant cleanout etc., will be unacceptable unless the contaminants are removed to the satisfaction of the Engineer. Sheet asphalt shall be stockpiled separately.

(b) RAS Stockpiles. Type 1 and Type 2 RAS shall be stockpiled separately and shall be sufficiently separated to prevent intermingling at the base. Each stockpile shall be signed indicating what type of RAS is present.

However, a RAS source may submit a written request to the Department for approval to blend mechanically a specified ratio of Type 1 RAS with Type 2 RAS. The source will not be permitted to change the ratio of the blend without the Department prior written approval. The Engineer's written approval will be required, to mechanically blend RAS with any fine aggregate produced under the AGCS, up to an equal weight of RAS, to improve workability. The fine aggregate shall be "B Quality" or better from an approved Aggregate Gradation Control System source. The fine aggregate shall be one that is approved for use in the HMA mixture and accounted for in the mix design and during HMA production.

Records identifying the shingle processing facility supplying the RAS, RAS type, and lot number shall be maintained by project contract number and kept for a minimum of three years.

**1031.03 Testing.** FRAP and RAS testing shall be according to the following.

(a) FRAP Testing. When used in HMA, the FRAP shall be sampled and tested either during processing or after stockpiling. It shall also be sampled during HMA production.

(1) During Stockpiling. For testing during stockpiling, washed extraction samples shall be run at the minimum frequency of one sample per 500 tons (450 metric tons) for the first 2000 tons (1800 metric tons) and one sample per 2000 tons (1800 metric tons) thereafter. A minimum of five tests shall be required for stockpiles less than 4000 tons (3600 metric tons).

(2) Incoming Material. For testing as incoming material, washed extraction samples shall be run at a minimum frequency of one sample per 2000 tons (1800 metric tons) or once per week, whichever comes first.

(3) After Stockpiling. For testing after stockpiling, the Contractor shall submit a plan for approval to the District proposing a satisfactory method of sampling and testing the RAP/FRAP pile either in-situ or by restockpiling. The sampling plan shall meet the minimum frequency required above and detail the procedure used to obtain representative samples throughout the pile for testing.

Before extraction, each field sample of FRAP, shall be split to obtain two samples of test sample size. One of the two test samples from the final split shall be labeled and stored for Department use. The Contractor shall extract the other test sample according to Department procedure. The Engineer reserves the right to test any sample (split or Department-taken) to verify Contractor test results.

(b) RAS Testing. RAS shall be sampled and tested during stockpiling according to Bureau of Materials and Physical Research Policy Memorandum, "Reclaimed Asphalt Shingle (RAS) Sources". The Contractor shall also sample as incoming material at the HMA plant.

(1) During Stockpiling. Washed extraction and testing for unacceptable materials shall be run at the minimum frequency of one sample per 200 tons (180 metric tons) for the first 1000 tons (900 metric tons) and one sample per 1000 tons (900 metric tons) thereafter. A minimum of five samples are required for stockpiles less than 1000 tons (900 metric tons). Once a ≤ 1000 ton (900 metric ton), five-sample/test stockpile has been established it shall be sealed. Additional incoming RAS shall be in a separate working pile as designated in the Quality Control plan and only added to the sealed stockpile when the test results of the working pile are complete and are found to meet the tolerances specified herein for the original sealed RAS stockpile.

(2) Incoming Material. For testing as incoming material at the HMA plant, washed extraction shall be run at the minimum frequency of one sample per 250 tons (227 metric tons). A minimum of five samples are required for stockpiles less than 1000 tons (900 metric tons). The incoming material test results shall meet the tolerances specified herein.

The Contractor shall obtain and make available all test results from start of the initial stockpile sampled and tested at the shingle processing facility in accordance with the facility's QC Plan.

Before extraction, each field sample shall be split to obtain two samples of test sample size. One of the two test samples from the final split shall be labeled and stored for Department use. The Contractor shall extract the other test sample according to Department procedures. The Engineer reserves the right to test any sample (split or Department-taken) to verify Contractor test results.

**1031.04 Evaluation of Tests.** Evaluation of test results shall be according to the following.

(a) Evaluation of FRAP Test Results. All test results shall be compiled to include asphalt binder content, gradation and, when applicable (for slag), $G_{mm}$. A five test average of results from the original pile will be used in the mix designs. Individual extraction test results run thereafter, shall be compared to the average used for the mix design, and will be accepted if within the tolerances listed below.

| Parameter | FRAP |
|---|---|
| No. 4 (4.75 mm) | ± 6 % |
| No. 8 (2.36 mm) | ± 5 % |
| No. 30 (600 μm) | ± 5 % |
| No. 200 (75 μm) | ± 2.0 % |
| Asphalt Binder | ± 0.3 % |
| $G_{mm}$ | ± 0.03 [1/] |

1/ For stockpile with slag or steel slag present as determined in the current Manual of Test Procedures Appendix B 21, "Determination of Reclaimed Asphalt Pavement Aggregate Bulk Specific Gravity".

If any individual sieve and/or asphalt binder content tests are out of the above tolerances when compared to the average used for the mix design, the FRAP stockpile shall not be used in Hot-Mix Asphalt unless the FRAP representing those tests is removed from the stockpile. All test data and acceptance ranges shall be sent to the District for evaluation.

The Contractor shall maintain a representative moving average of five tests to be used for Hot-Mix Asphalt production.

With the approval of the Engineer, the ignition oven may be substituted for extractions according to the ITP, "Calibration of the Ignition Oven for the Purpose of Characterizing Reclaimed Asphalt Pavement (RAP)" or Illinois Modified AASHTO T-164-11, Test Method A.

(b) Evaluation of RAS Test Results. All of the test results, with the exception of percent unacceptable materials, shall be compiled and averaged for asphalt binder content and gradation. A five test average of results from the original pile will be used in the mix designs. Individual test results run thereafter, when compared to the average used for the mix design, will be accepted if within the tolerances listed below.

| Parameter | RAS |
|---|---|
| No. 8 (2.36 mm) | ± 5 % |
| No. 16 (1.18 mm) | ± 5 % |
| No. 30 (600 µm) | ± 4 % |
| No. 200 (75 µm) | ± 2.5 % |
| Asphalt Binder Content | ± 2.0 % |

If any individual sieve and/or asphalt binder content tests are out of the above tolerances when compared to the average used for the mix design, the RAS shall not be used in Hot-Mix Asphalt unless the RAS representing those tests is removed from the stockpile. All test data and acceptance ranges shall be sent to the District for evaluation.

(c) Quality Assurance by the Engineer. The Engineer may witness the sampling and splitting conduct assurance tests on split samples taken by the Contractor for quality control testing a minimum of once a month.

The overall testing frequency will be performed over the entire range of Contractor samples for asphalt binder content and gradation. The Engineer may select any or all split samples for assurance testing. The test results will be made available to the Contractor as soon as they become available.

The Engineer will notify the Contractor of observed deficiencies.

Differences between the Contractor's and the Engineer's split sample test results will be considered acceptable if within the following limits.

| Test Parameter | Acceptable Limits of Precision | |
|---|---|---|
| % Passing:[1/] | FRAP | RAS |
| 1/2 in. | 5.0% | |
| No. 4 | 5.0% | |
| No. 8 | 3.0% | 4.0% |
| No. 30 | 2.0% | 4.0% |
| No. 200 | 2.2% | 4.0% |
| Asphalt Binder Content | 0.3% | 3.0% |
| $G_{mm}$ | 0.030 | |

1/ Based on washed extraction.

In the event comparisons are outside the above acceptable limits of precision, the Engineer will immediately investigate.

(d) Acceptance by the Engineer. Acceptable of the material will be based on the validation of the Contractor's quality control by the assurance process.

**1031.05 Quality Designation of Aggregate in RAP and FRAP.**

(a) RAP. The aggregate quality of the RAP for homogeneous, conglomerate, and conglomerate "D" quality stockpiles shall be set by the lowest quality of coarse aggregate in the RAP stockpile and are designated as follows.

(1) RAP from Class I, Superpave/HMA (High ESAL), or (Low ESAL) IL-9.5L surface mixtures are designated as containing Class B quality coarse aggregate.

(2) RAP from Superpave/HMA (Low ESAL) IL-19.0L binder mixture is designated as Class D quality coarse aggregate.

(3) RAP from Class I, Superpave/HMA (High ESAL) binder mixtures, bituminous base course mixtures, and bituminous base course widening mixtures are designated as containing Class C quality coarse aggregate.

(4) RAP from bituminous stabilized subbase and BAM shoulders are designated as containing Class D quality coarse aggregate.

(b) FRAP. If the Engineer has documentation of the quality of the FRAP aggregate, the Contractor shall use the assigned quality provided by the Engineer.

If the quality is not known, the quality shall be determined as follows. Fractionated RAP stockpiles containing plus #4 (4.75 mm) sieve coarse aggregate shall have a maximum tonnage of 5,000 tons (4,500 metric tons). The Contractor shall obtain a representative sample witnessed by the Engineer. The sample shall be a minimum of 50 lb (25 kg). The sample shall be extracted according to Illinois Modified AASHTO T 164 by a consultant laboratory prequalified by the Department for the specified testing. The consultant laboratory shall submit the test results along with the recovered aggregate to the District Office. The cost for this testing shall be paid by the Contractor. The District will forward the sample to the Bureau of Materials and Physical Research Aggregate Lab for MicroDeval Testing, according to ITP 327. A maximum loss of 15.0 percent will be applied for all HMA applications. The fine aggregate portion of the fractionated RAP shall not be used in any HMA mixtures that require a minimum of "B" quality aggregate or better, until the coarse aggregate fraction has been determined to be acceptable thru a MicroDeval Testing.

**1031.06 Use of FRAP and/or RAS in HMA.** The use of FRAP and/or RAS shall be the Contractor's option when constructing HMA in all contracts.

(a) FRAP. The use of FRAP in HMA shall be as follows.

(1) Coarse Aggregate Size (after extraction). The coarse aggregate in all FRAP shall be equal to or less than the nominal maximum size requirement for the HMA mixture to be produced.

(2) Steel Slag Stockpiles. FRAP stockpiles containing steel slag or other expansive material, as determined by the Department, shall be homogeneous and will be approved for use in HMA (High ESAL and Low ESAL) mixtures regardless of lift or mix type.

(3) Use in HMA Surface Mixtures (High and Low ESAL). FRAP stockpiles for use in HMA surface mixtures (High and Low ESAL) shall have coarse aggregate that is Class B quality or better. FRAP shall be considered equivalent to limestone for frictional considerations unless produced/screened to minus 3/8 inch.

(4) Use in HMA Binder Mixtures (High and Low ESAL), HMA Base Course, and HMA Base Course Widening. FRAP stockpiles for use in HMA binder mixtures (High and Low ESAL), HMA base course, and HMA base course widening shall be FRAP in which the coarse aggregate is Class C quality or better.

(5) Use in Shoulders and Subbase. FRAP stockpiles for use in HMA shoulders and stabilized subbase (HMA) shall be FRAP, Restricted FRAP, conglomerate, or conglomerate DQ.

(b) RAS. RAS meeting Type 1 or Type 2 requirements will be permitted in all HMA applications as specified herein.

(c) FRAP and/or RAS Usage Limits. Type 1 or Type 2 RAS may be used alone or in conjunction with FRAP in HMA mixtures up to a maximum of 5.0 percent by weight of the total mix.

When FRAP is used alone or FRAP is used in conjunction with RAS, the percent of virgin asphalt binder replacement (ABR) shall not exceed the amounts indicated in the table below for a given N Design.

Max Asphalt Binder Replacement for FRAP with RAS Combination

| HMA Mixtures 1/ 2/ 4/ | Maximum % ABR | | |
|---|---|---|---|
| Ndesign | Binder/Leveling Binder | Surface | Polymer Modified 3/ |
| 30L | 50 | 40 | 30 |
| 50 | 40 | 35 | 30 |
| 70 | 40 | 30 | 30 |
| 90 | 40 | 30 | 30 |
| 4.75 mm N-50 | | | 40 |
| SMA N-80 | | | 30 |

1/ For Low ESAL HMA shoulder and stabilized subbase, the percent asphalt binder replacement shall not exceed 50 % of the total asphalt binder in the mixture.

2/ When the binder replacement exceeds 15 % for all mixes, except for SMA and IL-4.75, the high and low virgin asphalt binder grades shall each be reduced by one grade (i.e. 25 % binder replacement using a virgin asphalt binder grade of PG64-22 will be reduced to a PG58-28). When constructing full depth HMA and the ABR is less than 15 %, the required virgin asphalt binder grade shall be PG64-28.

3/ When the ABR for SMA or IL-4.75 is 15 % or less, the required virgin asphalt binder shall be SBS PG76-22 and the elastic recovery shall be a minimum of 80. When the ABR for SMA or IL-4.75 exceeds 15%, the virgin asphalt binder grade shall be SBS PG70-28 and the elastic recovery shall be a minimum of 80.

4/ When FRAP or RAS is used alone, the maximum percent asphalt binder replacement designated on the table shall be reduced by 10 %.

**1031.07 HMA Mix Designs.** At the Contractor's option, HMA mixtures may be constructed utilizing RAP/FRAP and/or RAS material meeting the detailed requirements specified herein.

(a) FRAP and/or RAS. FRAP and /or RAS mix designs shall be submitted for verification. If additional FRAP or RAS stockpiles are tested and found to be within tolerance, as defined under "Evaluation of Tests" herein, and meet all requirements herein, the

additional FRAP or RAS stockpiles may be used in the original design at the percent previously verified.

(b) RAS. Type 1 and Type 2 RAS are not interchangeable in a mix design. A RAS stone bulk specific gravity (Gsb) of 2.300 shall be used for mix design purposes.

**1031.08 HMA Production.** HMA production utilizing FRAP and/or RAS shall be as follows.

To remove or reduce agglomerated material, a scalping screen, gator, crushing unit, or comparable sizing device approved by the Engineer shall be used in the RAS and FRAP feed system to remove or reduce oversized material. If material passing the sizing device adversely affects the mix production or quality of the mix, the sizing device shall be set at a size specified by the Engineer.

If during mix production, corrective actions fail to maintain FRAP, RAS or QC/QA test results within control tolerances or the requirements listed herein the Contractor shall cease production of the mixture containing FRAP or RAS and conduct an investigation that may require a new mix design.

(a) RAS. RAS shall be incorporated into the HMA mixture either by a separate weight depletion system or by using the RAP weigh belt. Either feed system shall be interlocked with the aggregate feed or weigh system to maintain correct proportions for all rates of production and batch sizes. The portion of RAS shall be controlled accurately to within ± 0.5 percent of the amount of RAS utilized. When using the weight depletion system, flow indicators or sensing devices shall be provided and interlocked with the plant controls such that the mixture production is halted when RAS flow is interrupted.

(b) HMA Plant Requirements. HMA plants utilizing FRAP and/or RAS shall be capable of automatically recording and printing the following information.

(1) Dryer Drum Plants.

a. Date, month, year, and time to the nearest minute for each print.

b. HMA mix number assigned by the Department.

c. Accumulated weight of dry aggregate (combined or individual) in tons (metric tons) to the nearest 0.1 ton (0.1 metric ton).

d. Accumulated dry weight of RAS and FRAP in tons (metric tons) to the nearest 0.1 ton (0.1 metric ton).

e. Accumulated mineral filler in revolutions, tons (metric tons), etc. to the nearest 0.1 unit.

f. Accumulated asphalt binder in gallons (liters), tons (metric tons), etc. to the nearest 0.1 unit.

g. Residual asphalt binder in the RAS and FRAP material as a percent of the total mix to the nearest 0.1 percent.

h. Aggregate RAS and FRAP moisture compensators in percent as set on the control panel. (Required when accumulated or individual aggregate and RAS and FRAP are printed in wet condition.)

i. When producing mixtures with FRAP and/or RAS, a positive dust control system shall be utilized.

j. Accumulated mixture tonnage.

k. Dust Removed (accumulated to the nearest 0.1 ton (0.1 metric ton))

(2) Batch Plants.

a. Date, month, year, and time to the nearest minute for each print.

b. HMA mix number assigned by the Department.

c. Individual virgin aggregate hot bin batch weights to the nearest pound (kilogram).

d. Mineral filler weight to the nearest pound (kilogram).

f. RAS and FRAP weight to the nearest pound (kilogram).

g. Virgin asphalt binder weight to the nearest pound (kilogram).

h. Residual asphalt binder in the RAS and FRAP material as a percent of the total mix to the nearest 0.1 percent.

The printouts shall be maintained in a file at the plant for a minimum of one year or as directed by the Engineer and shall be made available upon request. The printing system will be inspected by the Engineer prior to production and verified at the beginning of each construction season thereafter.

**1031.09 RAP in Aggregate Surface Course and Aggregate Wedge Shoulders, Type B.** The use of RAP or FRAP in aggregate surface course and aggregate shoulders shall be as follows.

(a) Stockpiles and Testing. RAP stockpiles may be any of those listed in Article 1031.02, except "Non-Quality" and "FRAP". The testing requirements of Article 1031.03 shall not apply. RAP used shall be according to the current Bureau of Materials and Physical

Research Policy Memorandum, "Reclaimed Asphalt Pavement (RAP) for Aggregate Applications".

(b) Gradation. The RAP material shall meet the gradation requirements for CA 6 according to Article 1004.01(c), except the requirements for the minus No. 200 (75 μm) sieve shall not apply. The sample for the RAP material shall be air dried to constant weight prior to being tested for gradation."

**GROUND TIRE RUBBER (GTR) MODIFIED ASPHALT BINDER (D-1)**
Effective: June 26, 2006
Revised: April 1, 2016

Add the following to the end of article 1032.05 of the Standard Specifications:

"(c) Ground Tire Rubber (GTR) Modified Asphalt Binder. A quantity of 10.0 to 14.0 percent GTR (Note 1) shall be blended by dry unit weight with a PG 64-28 to make a GTR 70-28 or a PG 58-28 to make a GTR 64-28. The base PG 64-28 and PG 58-28 asphalt binders shall meet the requirements of Article 1032.05(a). Compatible polymers may be added during production. The GTR modified asphalt binder shall meet the requirements of the following table.

| Test | Asphalt Grade GTR 70-28 | Asphalt Grade GTR 64-28 |
|---|---|---|
| Flash Point (C.O.C.), AASHTO T 48, °F (°C), min. | 450 (232) | 450 (232) |
| Rotational Viscosity, AASHTO T 316 @ 275 °F (135 °C), Poises, Pa·s, max. | 30 (3) | 30 (3) |
| Softening Point, AASHTO T 53, °F (°C), min. | 135 (57) | 130 (54) |
| Elastic Recovery, ASTM D 6084, Procedure A (sieve waived) @ 77 °F, (25 °C), aged, ss, 100 mm elongation, 5 cm/min., cut immediately, %, min. | 65 | 65 |

Note 1. GTR shall be produced from processing automobile and/or light truck tires by the ambient grinding method. GTR shall not exceed 1/16 in. (2 mm) in any dimension and shall contain no free metal particles or other materials. A mineral powder (such as talc) meeting the requirements of AASHTO M 17 may be added, up to a maximum of four percent by weight of GTR to reduce sticking and caking of the GTR particles. When tested in accordance with Illinois modified AASHTO T 27, *a* 50 g sample of the GTR shall conform to the following gradation requirements:

| Sieve Size | Percent Passing |
|---|---|
| No. 16 (1.18 mm) | 100 |
| No. 30 (600 μm) | 95 ± 5 |
| No. 50 (300 μm) | > 20 |

Add the following to the end of Note 1. of article 1030.03 of the Standard Specifications:

"A dedicated storage tank for the Ground Tire Rubber (GTR) modified asphalt binder shall be provided. This tank must be capable of providing continuous mechanical mixing throughout by continuous agitation and recirculation of the asphalt binder to provide a

uniform mixture. The tank shall be heated and capable of maintaining the temperature of the asphalt binder at 300 °F to 350 °F (149 °C to 177 °C). The asphalt binder metering systems of dryer drum plants shall be calibrated with the actual GTR modified asphalt binder material with an accuracy of ± 0.40 percent."

Revise 1030.02(c) of the Standard Specifications to read:

"(c) RAP Materials (Note 5) .....1031"

Add the following note to 1030.02 of the Standard Specifications:

Note 5. When using reclaimed asphalt pavement and/or reclaimed asphalt shingles, the maximum asphalt binder replacement percentage shall be according to the most recent special provision for recycled materials.

State of Illinois
Department of Transportation
Bureau of Local Roads and Streets

# SPECIAL PROVISION FOR EQUIPMENT RENTAL RATES

Effective: January 1, 2012

All references to Sections or Articles in this specification shall be construed to mean a specific Section or Article of the Standard Specifications for Road and Bridge Construction, adopted by the Department of Transportation.

Replace Article 109.04(b)(4) with the following:

"(4) Equipment. For any machinery or special equipment (other than small tools) the use of which has been authorized by the Engineer, the Contractor will be paid according to the latest revision of "SCHEDULE OF AVERAGE ANNUAL EQUIPMENT OWNERSHIP EXPENSE" and latest index factor as issued by the Illinois Department of Transportation. The equipment should be of a type and size reasonably required to complete the extra work."

BDE SPECIAL PROVISIONS
For the April 28 and June 16, 2017 Lettings

The following special provisions indicated by an "x" are applicable to this contract and will be included by the Project Development and Implementation Section of the BD&E. An * indicates a new or revised special provision for the letting.

| File Name | # | | Special Provision Title | Effective | Revised |
|---|---|---|---|---|---|
| 80099 | 1 | | Accessible Pedestrian Signals (APS) | April 1, 2003 | Jan. 1, 2014 |
| * 80382 | 2 | | Adjusting Frames and Grates | April 1, 2017 | |
| 80274 | 3 | | Aggregate Subgrade Improvement | April 1, 2012 | April 1, 2016 |
| 80192 | 4 | | Automated Flagger Assistance Device | Jan. 1, 2008 | |
| 80173 | 5 | | Bituminous Materials Cost Adjustments | Nov. 2, 2006 | July 1, 2015 |
| 80241 | 6 | | Bridge Demolition Debris | July 1, 2009 | |
| 5026I | 7 | | Building Removal-Case I (Non-Friable and Friable Asbestos) | Sept. 1, 1990 | April 1, 2010 |
| 5048I | 8 | | Building Removal-Case II (Non-Friable Asbestos) | Sept. 1, 1990 | April 1, 2010 |
| 5049I | 9 | | Building Removal-Case III (Friable Asbestos) | Sept. 1, 1990 | April 1, 2010 |
| 5053I | 10 | | Building Removal-Case IV (No Asbestos) | Sept. 1, 1990 | April 1, 2010 |
| 80366 | 11 | ✔ | Butt Joints | July 1, 2016 | |
| 80198 | 12 | | Completion Date (via calendar days) | April 1, 2008 | |
| 80199 | 13 | | Completion Date (via calendar days) Plus Working Days | April 1, 2008 | |
| 80293 | 14 | | Concrete Box Culverts with Skews > 30 Degrees and Design Fills ≤ 5 Feet | April 1, 2012 | July 1, 2016 |
| 80311 | 15 | | Concrete End Sections for Pipe Culverts | Jan. 1, 2013 | April 1, 2016 |
| 80277 | 16 | | Concrete Mix Design – Department Provided | Jan. 1, 2012 | April 1, 2016 |
| 80261 | 17 | ✔ | Construction Air Quality – Diesel Retrofit | June 1, 2010 | Nov. 1, 2014 |
| 80029 | 18 | | Disadvantaged Business Enterprise Participation | Sept. 1, 2000 | July 2, 2016 |
| 80378 | 19 | | Dowel Bar Inserter | Jan. 1, 2017 | |
| 80229 | 20 | | Fuel Cost Adjustment | April 1, 2009 | July 1, 2015 |
| 80304 | 21 | | Grooving for Recessed Pavement Markings | Nov. 1, 2012 | Aug. 1, 2014 |
| 80246 | 22 | ✔ | Hot-Mix Asphalt – Density Testing of Longitudinal Joints | Jan. 1, 2010 | April 1, 2016 |
| * 80347 | 23 | | Hot-Mix Asphalt – Pay for Performance Using Percent Within Limits – Jobsite Sampling | Nov. 1, 2014 | April 1, 2017 |
| * 80383 | 24 | | Hot-Mix Asphalt – Quality Control for Performance | April 1, 2017 | |
| 80376 | 25 | ✔ | Hot-Mix Asphalt – Tack Coat | Nov. 1, 2016 | |
| 80367 | 26 | | Light Poles | July 1, 2016 | |
| 80368 | 27 | | Light Tower | July 1, 2016 | |
| 80336 | 28 | | Longitudinal Joint and Crack Patching | April 1, 2014 | April 1, 2016 |
| 80369 | 29 | | Mast Arm Assembly and Pole | July 1, 2016 | |
| 80045 | 30 | | Material Transfer Device | June 15, 1999 | Aug. 1, 2014 |
| 80165 | 31 | | Moisture Cured Urethane Paint System | Nov. 1, 2006 | Jan. 1, 2010 |
| 80349 | 32 | | Pavement Marking Blackout Tape | Nov. 1, 2014 | April 1, 2016 |
| 80371 | 33 | | Pavement Marking Removal | July 1, 2016 | |
| * 80377 | 34 | | Portable Changeable Message Signs | Nov. 1, 2016 | April 1, 2017 |
| 80359 | 35 | | Portland Cement Concrete Bridge Deck Curing | April 1, 2015 | Jan. 1, 2017 |
| 80338 | 36 | | Portland Cement Concrete Partial Depth Hot-Mix Asphalt Patching | April 1, 2014 | April 1, 2016 |
| 80300 | 37 | | Preformed Plastic Pavement Marking Type D - Inlaid | April 1, 2012 | April 1, 2016 |
| 80328 | 38 | | Progress Payments | Nov. 2, 2013 | |
| 3426I | 39 | | Railroad Protective Liability Insurance | Dec. 1, 1986 | Jan. 1, 2006 |
| 80157 | 40 | | Railroad Protective Liability Insurance (5 and 10) | Jan. 1, 2006 | |
| 80306 | 41 | | Reclaimed Asphalt Pavement (RAP) and Reclaimed Asphalt Shingles (RAS) | Nov. 1, 2012 | April 1, 2016 |
| 80340 | 42 | | Speed Display Trailer | April 2, 2014 | Jan. 1, 2017 |
| 80127 | 43 | | Steel Cost Adjustment | April 2, 2004 | July 1, 2015 |

| File Name | # | | Special Provision Title | Effective | Revised |
|---|---|---|---|---|---|
| 80379 | 44 | | Steel Plate Beam Guardrail | Jan. 1, 2017 | |
| 80317 | 45 | | Surface Testing of Hot-Mix Asphalt Overlays | Jan. 1, 2013 | April 1, 2016 |
| * 80298 | 46 | | Temporary Pavement Marking (NOTE: This special provision was previously named *"Pavement Marking Tape Type IV"*.) | April 1, 2012 | April 1, 2017 |
| 20338 | 47 | | Training Special Provisions | Oct. 15, 1975 | |
| 80318 | 48 | | Traversable Pipe Grate | Jan. 1, 2013 | April 1, 2014 |
| 80381 | 49 | | Traffic Barrier Terminal, Type 1 Special | Jan. 1, 2017 | |
| 80380 | 50 | | Tubular Markers | Jan. 1, 2017 | |
| 80288 | 51 | ✔ | Warm Mix Asphalt | Jan. 1, 2012 | April 1, 2016 |
| 80302 | 52 | | Weekly DBE Trucking Reports | June 2, 2012 | April 2, 2015 |
| 80289 | 53 | | Wet Reflective Thermoplastic Pavement Marking | Jan. 1, 2012 | |
| 80071 | 54 | | Working Days | Jan. 1, 2002 | |

The following special provisions are in the 2017 Supplemental Specifications and Recurring Special Provisions.

| File Name | Special Provision Title | New Location | Effective | Revised |
|---|---|---|---|---|
| 80360 | Coarse Aggregate Quality | Article 1004.01 | July 1, 2015 | |
| 80363 | Engineer's Field Office | Article 670.07 | April 1, 2016 | |
| 80358 | Equal Employment Opportunity | Recurring CS #1 and #5 | April 1, 2015 | |
| 80364 | Errata for the 2016 Standard Specifications | Supplemental | April 1, 2016 | |
| 80342 | Mechanical Side Tie Bar Inserter | Articles 420.03, 420.05, and 1103.19 | Aug. 1, 2014 | April 1, 2016 |
| 80370 | Mechanical Splicers | Article 1006.10 | July 1, 2016 | |
| 80361 | Overhead Sign Structures Certification of Metal Fabricator | Article 106.08 | Nov. 1, 2015 | April 1, 2016 |
| 80365 | Pedestrian Push-Button | Article 888.03 | April 1, 2016 | |
| 80353 | Portland Cement Concrete Inlay or Overlay | Recurring CS #34 | Jan. 1, 2015 | April 1, 2016 |
| 80372 | Preventive Maintenance – Bituminous Surface Treatment (A-1) | Recurring CS #28 | Jan. 1, 2009 | July 1, 2016 |
| 80373 | Preventive Maintenance – Cape Seal | Recurring CS #29 | Jan. 1, 2009 | July 1, 2016 |
| 80374 | Preventive Maintenance – Micro-Surfacing | Recurring CS #30 | Jan. 1, 2009 | July 1, 2016 |
| 80375 | Preventive Maintenance – Slurry Seal | Recurring CS #31 | Jan. 1, 2009 | July 1, 2016 |
| 80362 | Steel Slag in Trench Backfill | Articles 1003.01 and 1003.04 | Jan. 1, 2016 | |
| 80355 | Temporary Concrete Barrier | Articles 704.02, 704.04, 704.05, and 704.06 | Jan. 1, 2015 | July 1, 2015 |

The following special provisions require additional information from the designer. The additional information needs to be included in a separate document attached to this check sheet. The Project Development and Implementation section will then include the information in the applicable special provision. The Special Provisions are:

- Bridge Demolition Debris
- Building Removal - Case I
- Building Removal – Case II
- Building Removal - Case III
- Building Removal-Case IV
- Completion Date
- Completion Date Plus Working Days
- DBE Participation
- Material Transfer Device
- Railroad Protective Liability Insurance
- Training Special Provisions
- Working Days

**BUTT JOINTS (BDE)**

Effective: July 1, 2016

Add the following to Article 406.08 of the Standard Specifications.

"(c) Temporary Plastic Ramps. Temporary plastic ramps shall be made of high density polyethylene meeting the properties listed below. Temporary plastic ramps shall only be used on roadways with permanent posted speeds of 55 mph or less. The ramps shall have a minimum taper rate of 1:30 (V:H). The leading edge of the plastic ramp shall have a maximum thickness of 1/4 in. (6 mm) and the trailing edge shall match the height of the adjacent pavement ± 1/4 in. (± 6 mm).

The ramp will be accepted by certification. The Contractor shall furnish a certification from the manufacturer stating the temporary plastic ramp meets the following requirements.

| Physical Property | Test Method | Requirement |
|---|---|---|
| Melt Index | ASTM D 1238 | 8.2 g/10 minutes |
| Density | ASTM D 1505 | 0.965 g/cc |
| Tensile Strength @ Break | ASTM D 638 | 2223 psi (15 MPa) |
| Tensile Strength @ Yield | ASTM D 638 | 4110 psi (28 MPa) |
| Elongation @ Yield 1/, percent | ASTM D 638 | 7.3 min. |
| Durometer Hardness, Shore D | ASTM D 2240 | 65 |
| Heat Deflection Temperature, 66 psi | ASTM D 648 | 176 °F (80 °C) |
| Low Temperature Brittleness, $F_{50}$ | ASTM D 746 | <-105 °F (<-76 °C) |

1/ Crosshead speed -2 in./minute

The temporary plastic ramps shall be installed according to the manufacturer's specifications and fastened with anchors meeting the manufacturer's recommendations. Temporary plastic ramps that fail to stay in place or create a traffic hazard shall be replaced immediately with temporary HMA ramps at the Contractor's expense."

80366

## CONSTRUCTION AIR QUALITY – DIESEL RETROFIT (BDE)

Effective: June 1, 2010
Revised: November 1, 2014

The reduction of emissions of particulate matter (PM) for off-road equipment shall be accomplished by installing retrofit emission control devices. The term "equipment" refers to diesel fuel powered devices rated at 50 hp and above, to be used on the jobsite in excess of seven calendar days over the course of the construction period on the jobsite (including rental equipment).

Contractor and subcontractor diesel powered off-road equipment assigned to the contract shall be retrofitted using the phased in approach shown below. Equipment that is of a model year older than the year given for that equipment's respective horsepower range shall be retrofitted:

| Effective Dates | Horsepower Range | Model Year |
|---|---|---|
| | | |
| June 1, 2010 1/ | 600-749 | 2002 |
| | 750 and up | 2006 |
| | | |
| June 1, 2011 2/ | 100-299 | 2003 |
| | 300-599 | 2001 |
| | 600-749 | 2002 |
| | 750 and up | 2006 |
| | | |
| June 1, 2012 2/ | 50-99 | 2004 |
| | 100-299 | 2003 |
| | 300-599 | 2001 |
| | 600-749 | 2002 |
| | 750 and up | 2006 |

1/ Effective dates apply to Contractor diesel powered off-road equipment assigned to the contract.
2/ Effective dates apply to Contractor and subcontractor diesel powered off-road equipment assigned to the contract.

The retrofit emission control devices shall achieve a minimum PM emission reduction of 50 percent and shall be:

a) Included on the U.S. Environmental Protection Agency (USEPA) *Verified Retrofit Technology List* (http://www.epa.gov/cleandiesel/verification/verif-list.htm), or verified by the California Air Resources Board (CARB) (http://www.arb.ca.gov/diesel/verdev/vt/cvt.htm); or

b) Retrofitted with a non-verified diesel retrofit emission control device if verified retrofit emission control devices are not available for equipment proposed to be used on the project, and if the Contractor has obtained a performance certification from the retrofit

device manufacturer that the emission control device provides a minimum PM emission reduction of 50 percent.

Note: Large cranes (Crawler mounted cranes) which are responsible for critical lift operations are exempt from installing retrofit emission control devices if such devices adversely affect equipment operation.

Diesel powered off-road equipment with engine ratings of 50 hp and above, which are unable to be retrofitted with verified emission control devices or if performance certifications are not available which will achieve a minimum 50 percent PM reduction, may be granted a waiver by the Department if documentation is provided showing good faith efforts were made by the Contractor to retrofit the equipment.

Construction shall not proceed until the Contractor submits a certified list of the diesel powered off-road equipment that will be used, and as necessary, retrofitted with emission control devices. The list(s) shall include (1) the equipment number, type, make, Contractor/rental company name; and (2) the emission control devices make, model, USEPA or CARB verification number, or performance certification from the retrofit device manufacturer. Equipment reported as fitted with emissions control devices shall be made available to the Engineer for visual inspection of the device installation, prior to being used on the jobsite.

The Contractor shall submit an updated list of retrofitted off-road construction equipment as retrofitted equipment changes or comes on to the jobsite. The addition or deletion of any diesel powered equipment shall be included on the updated list.

If any diesel powered off-road equipment is found to be in non-compliance with any portion of this special provision, the Engineer will issue the Contractor a diesel retrofit deficiency deduction.

Any costs associated with retrofitting any diesel powered off-road equipment with emission control devices shall be considered as included in the contract unit prices bid for the various items of work involved and no additional compensation will be allowed. The Contractor's compliance with this notice and any associated regulations shall not be grounds for a claim.

**Diesel Retrofit Deficiency Deduction**

When the Engineer determines that a diesel retrofit deficiency exists, a daily monetary deduction will be imposed for each calendar day or fraction thereof the deficiency continues to exist. The calendar day(s) will begin when the time period for correction is exceeded and end with the Engineer's written acceptance of the correction. The daily monetary deduction will be $1,000.00 for each deficiency identified.

The deficiency will be based on lack of diesel retrofit emissions control.

If a Contractor accumulates three diesel retrofit deficiency deductions for the same piece of equipment in a contract period, the Contractor will be shutdown until the deficiency is corrected.

Such a shutdown will not be grounds for any extension of the contract time, waiver of penalties, or be grounds for any claim.

80261

## HOT-MIX ASPHALT - DENSITY TESTING OF LONGITUDINAL JOINTS (BDE)

Effective: January 1, 2010
Revised: April 1, 2016

Description. This work shall consist of testing the density of longitudinal joints as part of the quality control/quality assurance (QC/QA) of hot-mix asphalt (HMA). Work shall be according to Section 1030 of the Standard Specifications except as follows.

Quality Control/Quality Assurance (QC/QA). Delete the second and third sentence of the third paragraph of Article 1030.05(d)(3) of the Standard Specifications.

Add the following paragraphs to the end of Article 1030.05(d)(3) of the Standard Specifications:

"Longitudinal joint density testing shall be performed at each random density test location. Longitudinal joint testing shall be located at a distance equal to the lift thickness or a minimum of 4 in. (100 mm), from each pavement edge. (i.e. for a 5 in. (125 mm) lift the near edge of the density gauge or core barrel shall be within 5 in. (125 mm) from the edge of pavement.) Longitudinal joint density testing shall be performed using either a correlated nuclear gauge or cores.

a. Confined Edge. Each confined edge density shall be represented by a one-minute nuclear density reading or a core density and shall be included in the average of density readings or core densities taken across the mat which represents the Individual Test.

b. Unconfined Edge. Each unconfined edge joint density shall be represented by an average of three one-minute density readings or a single core density at the given density test location and shall meet the density requirements specified herein. The three one-minute readings shall be spaced 10 ft (3 m) apart longitudinally along the unconfined pavement edge and centered at the random density test location."

Revise the Density Control Limits table in Article 1030.05(d)(4) of the Standard Specifications to read:

| "Mixture Composition | Parameter | Individual Test (includes confined edges) | Unconfined Edge Joint Density Minimum |
|---|---|---|---|
| IL-4.75 | Ndesign = 50 | 93.0 – 97.4% [1/] | 91.0% |
| IL-9.5 | Ndesign = 90 | 92.0 – 96.0% | 90.0% |
| IL-9.5,IL-9.5L | Ndesign < 90 | 92.5 – 97.4% | 90.0% |
| IL-19.0 | Ndesign = 90 | 93.0 – 96.0% | 90.0% |
| IL-19.0, IL-19.0L | Ndesign < 90 | 93.0 [2/]– 97.4% | 90.0% |
| SMA | Ndesign = 50 & 80 | 93.5 – 97.4% | 91.0%" |

80246

**HOT-MIX ASPHALT – TACK COAT (BDE)**

Effective: November 1, 2016

Revise Article 1032.06(a) of the Standard Specifications to read:

"(a) Anionic Emulsified Asphalt. Anionic emulsified asphalts shall be according to AASHTO M 140. SS-1h emulsions used as a tack coat shall have the cement mixing test waived."

80376

**WARM MIX ASPHALT (BDE)**

Effective: January 1, 2012
Revised: April 1, 2016

Description. This work shall consist of designing, producing and constructing Warm Mix Asphalt (WMA) in lieu of Hot Mix Asphalt (HMA) at the Contractor's option. Work shall be according to Sections 406, 407, 408, 1030, and 1102 of the Standard Specifications, except as modified herein. In addition, any references to HMA in the Standard Specifications, or the special provisions shall be construed to include WMA.

WMA is an asphalt mixture which can be produced at temperatures lower than allowed for HMA utilizing approved WMA technologies. WMA technologies are defined as the use of additives or processes which allow a reduction in the temperatures at which HMA mixes are produced and placed. WMA is produced by the use of additives, a water foaming process, or combination of both. Additives include minerals, chemicals or organics incorporated into the asphalt binder stream in a dedicated delivery system. The process of foaming injects water into the asphalt binder stream, just prior to incorporation of the asphalt binder with the aggregate.

Approved WMA technologies may also be used in HMA provided all the requirements specified herein, with the exception of temperature, are met. However, asphalt mixtures produced at temperatures in excess of 275 °F (135 °C) will not be considered WMA when determining the grade reduction of the virgin asphalt binder grade.

Equipment.

Revise the first paragraph of Article 1102.01 of the Standard Specifications to read:

"**1102.01 Hot-Mix Asphalt Plant.** The hot-mix asphalt (HMA) plant shall be the batch-type, continuous-type, or dryer drum plant. The plants shall be evaluated for prequalification rating and approval to produce HMA according to the current Bureau of Materials and Physical Research Policy Memorandum, "Approval of Hot-Mix Asphalt Plants and Equipment". Once approved, the Contractor shall notify the Bureau of Materials and Physical Research to obtain approval of all plant modifications. The plants shall not be used to produce mixtures concurrently for more than one project or for private work unless permission is granted in writing by the Engineer. The plant units shall be so designed, coordinated and operated that they will function properly and produce HMA having uniform temperatures and compositions within the tolerances specified. The plant units shall meet the following requirements."

Add the following to Article 1102.01(a) of the Standard Specifications.

"(11) Equipment for Warm Mix Technologies.

a. Foaming. Metering equipment for foamed asphalt shall have an accuracy of ± 2 percent of the actual water metered. The foaming control system shall be electronically interfaced with the asphalt binder meter.

b. Additives. Additives shall be introduced into the plant according to the supplier's recommendations and shall be approved by the Engineer. The system for introducing the WMA additive shall be interlocked with the aggregate feed or weigh system to maintain correct proportions for all rates of production and batch sizes."

Mix Design Verification.

Add the following to Article 1030.04 of the Standard Specifications.

"(e) Warm Mix Technologies.

(1) Foaming. WMA mix design verification will not be required when foaming technology is used alone (without WMA additives). However, the foaming technology shall only be used on HMA designs previously approved by the Department.

(2) Additives. WMA mix designs utilizing additives shall be submitted to the Engineer for mix design verification."

Construction Requirements.

Revise the second paragraph of Article 406.06(b)(1) of the Standard Specifications to read:

"The HMA shall be delivered at a temperature of 250 to 350 °F (120 to 175 °C). WMA shall be delivered at a minimum temperature of 215 °F (102 °C)."

Basis of Payment.

This work will be paid at the contract unit price bid for the HMA pay items involved. Anti-strip will not be paid for separately, but shall be considered as included in the cost of the work.

80288

| HOT-MIX ASPHALT MIXTURE REQUIREMENTS | |
|---|---|
| **MIXTURE TYPE** | **AIR VOIDS** |
| **PAVEMENT RESURFACING** | |
| Hot-Mix Asphalt Binder Course, IL-19.0, N50 | 4% @ 50 Gyr. |
| Leveling Binder (Machine Method), N50 (IL-9.5 mm) | 4% @ 50 Gyr. |
| Hot-Mix Asphalt Surface Course, Mix "D", N50 (IL-9.5 mm) | 3.5% @ 50 Gyr. |
| **PATCHING** | |
| Class D Patches (HMA Binder IL-19 mm) | 4% @ 70 Gyr. |
| Pavement Removal & HMA Replacement (HMA Binder IL-19 mm) | 4% @ 70 Gyr. |
| **DRIVEWAYS** | |
| Hot-Mix Asphalt Surface Course, Mix "D", N50 (IL-9.5 mm), 3" | 3.5% @ 50 Gyr. |

The unit weight used to calculate all Hot-Mix Asphalt Surface Mixture Quantities is 112 Lbs/SqYd/In.

The "AC Type" for polymerized HMA mixes shall be SBS/SBR PG 76-22 and for non-polymerized HMA the "AC Type" shall be "PG 64-22" unless modified by district one special provisions.
For use of recycled materials see special provisions.

**This schedule contains the prevailing wage rates required to be paid for work performed on or after Monday, June 5, 2017 on public works projects in this County. Pursuant to 820 ILCS 130/4, public bodies in this County that have active public works projects are responsible for notifying all contractors and subcontractors working on those public works projects of the change (if any) to rates that were previously in effect. The failure of a public body to provide such notice does not relieve contractors or subcontractors of their obligations under the Prevailing Wage Act, including the duty to pay the relevant prevailing wage in effect at the time work subject to the Act is performed.**

DUPAGE COUNTY
PREVAILING WAGE
RATES EFFECTIVE JUNE
5, 2017

| TradeTitle | Region | Type | Class | Base Wage | Foreman Wage | M-F OT | OSA | OSH | H/W | Pension | Vacation | Training |
|---|---|---|---|---|---|---|---|---|---|---|---|---|
| ASBESTOS ABT-GEN | All | All | | 40.40 | 40.95 | 1.5 | 1.5 | 2.0 | 14.23 | 11.57 | 0.00 | 0.50 |
| ASBESTOS ABT-MEC | All | BLD | | 37.46 | 39.96 | 1.5 | 1.5 | 2.0 | 11.62 | 11.06 | 0.00 | 0.72 |
| BOILERMAKER | All | BLD | | 47.07 | 51.30 | 2.0 | 2.0 | 2.0 | 6.97 | 18.13 | 0.00 | 0.40 |
| BRICK MASON | All | BLD | | 44.88 | 49.37 | 1.5 | 1.5 | 2.0 | 10.25 | 15.30 | 0.00 | 0.85 |
| CARPENTER | All | All | | 45.35 | 47.35 | 1.5 | 1.5 | 2.0 | 11.79 | 17.60 | 0.00 | 0.63 |
| CEMENT MASON | All | All | | 44.25 | 46.25 | 2.0 | 1.5 | 2.0 | 13.65 | 15.51 | 0.00 | 0.65 |
| CERAMIC TILE FNSHER | All | BLD | | 37.81 | 37.81 | 1.5 | 1.5 | 2.0 | 10.55 | 10.12 | 0.00 | 0.65 |
| COMMUNICATION TECH | All | BLD | | 33.00 | 35.40 | 1.5 | 1.5 | 2.0 | 10.10 | 17.19 | 2.07 | 0.61 |
| ELECTRIC PWR EQMT OP | All | All | | 37.89 | 51.48 | 1.5 | 1.5 | 2.0 | 5.00 | 11.75 | 0.00 | 0.38 |
| ELECTRIC PWR EQMT OP | All | HWY | | 40.59 | 55.15 | 1.5 | 1.5 | 2.0 | 5.25 | 12.59 | 0.00 | 0.71 |
| ELECTRIC PWR GRNDMAN | All | All | | 29.30 | 51.48 | 1.5 | 1.5 | 2.0 | 5.00 | 9.09 | 0.00 | 0.29 |
| ELECTRIC PWR GRNDMAN | All | HWY | | 32.50 | 55.15 | 1.5 | 1.5 | 2.0 | 5.25 | 10.09 | 0.00 | 0.58 |
| ELECTRIC PWR LINEMAN | All | All | | 45.36 | 51.48 | 1.5 | 1.5 | 2.0 | 5.00 | 14.06 | 0.00 | 0.45 |
| ELECTRIC PWR LINEMAN | All | HWY | | 48.59 | 55.15 | 1.5 | 1.5 | 2.0 | 5.25 | 15.07 | 0.00 | 0.85 |

| | | | | | | | | | | | | |
|---|---|---|---|---|---|---|---|---|---|---|---|---|
| ELECTRIC PWR TRK DRV | All | All | | 30.34 | 51.48 | 1.5 | 1.5 | 2.0 | 5.00 | 9.40 | 0.00 | 0.30 |
| ELECTRIC PWR TRK DRV | All | HWY | | 31.40 | 53.29 | 1.5 | 1.5 | 2.0 | 5.00 | 9.73 | 0.00 | 0.31 |
| ELECTRICIAN | All | BLD | | 38.74 | 42.74 | 1.5 | 1.5 | 2.0 | 12.10 | 20.81 | 4.43 | 0.68 |
| ELEVATOR CONSTRUCTOR | All | BLD | | 51.94 | 58.43 | 2.0 | 2.0 | 2.0 | 14.43 | 14.96 | 4.16 | 0.90 |
| FENCE ERECTOR | NE | All | | 38.34 | 40.34 | 1.5 | 1.5 | 2.0 | 13.15 | 13.10 | 0.00 | 0.40 |
| FENCE ERECTOR | W | ALL | | 45.06 | 48.66 | 2.0 | 2.0 | 2.0 | 10.52 | 20.76 | 0.00 | 0.70 |
| GLAZIER | All | BLD | | 41.70 | 43.20 | 1.5 | 2.0 | 2.0 | 13.94 | 18.99 | 0.00 | 0.94 |
| HT/FROST INSULATOR | All | BLD | | 48.45 | 50.95 | 1.5 | 1.5 | 2.0 | 11.47 | 12.16 | 0.00 | 0.72 |
| IRON WORKER | E | All | | 46.20 | 48.20 | 2.0 | 2.0 | 2.0 | 13.65 | 21.52 | 0.00 | 0.35 |
| IRON WORKER | W | All | | 45.56 | 49.20 | 2.0 | 2.0 | 2.0 | 11.02 | 21.51 | 0.00 | 0.70 |
| LABORER | All | All | | 40.20 | 40.95 | 1.5 | 1.5 | 2.0 | 14.23 | 11.57 | 0.00 | 0.50 |
| LATHER | All | All | | 44.35 | 46.35 | 1.5 | 1.5 | 2.0 | 13.29 | 16.39 | 0.00 | 0.63 |
| MACHINIST | All | BLD | | 45.35 | 47.85 | 1.5 | 1.5 | 2.0 | 7.26 | 8.95 | 1.85 | 0.00 |
| MARBLE FINISHERS | All | All | | 33.45 | 33.45 | 1.5 | 1.5 | 2.0 | 10.25 | 14.44 | 0.00 | 0.46 |
| MARBLE MASON | All | BLD | | 44.13 | 48.54 | 1.5 | 1.5 | 2.0 | 10.25 | 14.97 | 0.00 | 0.59 |
| MATERIAL TESTER I | All | All | | 30.20 | 30.20 | 1.5 | 1.5 | 2.0 | 14.23 | 11.57 | 0.00 | 0.50 |
| MATERIALS TESTER II | All | All | | 35.20 | 35.20 | 1.5 | 1.5 | 2.0 | 14.23 | 11.57 | 0.00 | 0.50 |
| MILLWRIGHT | All | All | | 45.35 | 47.35 | 1.5 | 1.5 | 2.0 | 11.79 | 17.60 | 0.00 | 0.63 |
| OPERATING ENGINEER | All | BLD | 1 | 49.10 | 34.50 | 2.0 | 2.0 | 2.0 | 18.05 | 13.60 | 1.90 | 1.30 |
| OPERATING ENGINEER | All | BLD | 2 | 47.80 | 53.10 | 2.0 | 2.0 | 2.0 | 18.05 | 13.60 | 1.90 | 1.30 |
| OPERATING ENGINEER | All | BLD | 3 | 45.25 | 53.10 | 2.0 | 2.0 | 2.0 | 18.05 | 13.60 | 1.90 | 1.30 |
| OPERATING ENGINEER | All | BLD | 4 | 43.50 | 53.10 | 2.0 | 2.0 | 2.0 | 18.05 | 13.60 | 1.90 | 1.30 |
| OPERATING ENGINEER | All | BLD | 5 | 52.85 | 53.10 | 2.0 | 2.0 | 2.0 | 18.05 | 13.60 | 1.90 | 1.30 |
| OPERATING ENGINEER | All | BLD | 6 | 50.10 | 53.10 | 2.0 | 2.0 | 2.0 | 18.05 | 13.60 | 1.90 | 1.30 |
| OPERATING ENGINEER | All | BLD | 7 | 52.10 | 53.10 | 2.0 | 2.0 | 2.0 | 18.05 | 13.60 | 1.90 | 1.30 |
| OPERATING ENGINEER | All | FLT | | 37.00 | 54.75 | 1.5 | 1.5 | 2.0 | 17.65 | 12.65 | 1.90 | 1.35 |
| OPERATING ENGINEER | All | HWY | 1 | 47.30 | 51.30 | 1.5 | 1.5 | 2.0 | 18.05 | 13.60 | 1.90 | 1.30 |
| OPERATING ENGINEER | All | HWY | 2 | 46.75 | 51.30 | 1.5 | 1.5 | 2.0 | 18.05 | 13.60 | 1.90 | 1.30 |

| | | | | | | | | | | | | |
|---|---|---|---|---|---|---|---|---|---|---|---|---|
| OPERATING ENGINEER | All | HWY | 3 | 44.70 | 51.30 | 1.5 | 1.5 | 2.0 | 18.05 | 13.60 | 1.90 | 1.30 |
| OPERATING ENGINEER | All | HWY | 4 | 43.30 | 51.30 | 1.5 | 1.5 | 2.0 | 18.05 | 13.60 | 1.90 | 1.30 |
| OPERATING ENGINEER | All | HWY | 5 | 42.10 | 51.30 | 1.5 | 1.5 | 2.0 | 18.05 | 13.60 | 1.90 | 1.30 |
| OPERATING ENGINEER | All | HWY | 6 | 50.30 | 51.30 | 1.5 | 1.5 | 2.0 | 18.05 | 13.60 | 1.90 | 1.30 |
| OPERATING ENGINEER | All | HWY | 7 | 48.30 | 51.30 | 1.5 | 1.5 | 2.0 | 18.05 | 13.60 | 1.90 | 1.30 |
| ORNAMNTL IRON WORKER | E | All | | 45.00 | 47.50 | 2.0 | 2.0 | 2.0 | 13.55 | 17.94 | 0.00 | 0.65 |
| ORNAMNTL IRON WORKER | W | All | | 45.06 | 48.66 | 2.0 | 2.0 | 2.0 | 10.52 | 20.76 | 0.00 | 0.70 |
| PAINTER | All | All | | 42.93 | 44.93 | 1.5 | 1.5 | 1.5 | 10.30 | 8.20 | 0.00 | 1.35 |
| PAINTER SIGNS | All | BLD | | 33.92 | 38.09 | 1.5 | 1.5 | 1.5 | 2.60 | 2.71 | 0.00 | 0.00 |
| PILEDRIVER | All | All | | 44.35 | 46.35 | 1.5 | 1.5 | 2.0 | 13.29 | 16.39 | 0.00 | 0.63 |
| PIPEFITTER | All | BLD | | 47.50 | 50.50 | 1.5 | 1.5 | 2.0 | 9.55 | 17.85 | 0.00 | 2.07 |
| PLASTERER | All | BLD | | 44.63 | 47.31 | 1.5 | 1.5 | 2.0 | 10.25 | 15.03 | 0.00 | 0.85 |
| PLUMBER | All | BLD | | 48.25 | 50.25 | 1.5 | 1.5 | 2.0 | 14.09 | 12.65 | 0.00 | 1.18 |
| ROOFER | All | BLD | | 41.70 | 44.70 | 1.5 | 1.5 | 2.0 | 8.28 | 11.59 | 0.00 | 0.53 |
| SHEETMETAL WORKER | All | BLD | | 45.77 | 47.77 | 1.5 | 1.5 | 2.0 | 10.65 | 14.10 | 0.00 | 0.82 |
| SPRINKLER FITTER | All | BLD | | 47.20 | 49.20 | 1.5 | 1.5 | 2.0 | 12.25 | 11.55 | 0.00 | 0.55 |
| STEEL ERECTOR | E | All | | 42.07 | 44.07 | 2.0 | 2.0 | 2.0 | 13.45 | 19.59 | 0.00 | 0.35 |
| STEEL ERECTOR | W | All | | 45.06 | 48.66 | 2.0 | 2.0 | 2.0 | 10.52 | 20.76 | 0.00 | 0.70 |
| STONE MASON | All | BLD | | 44.88 | 49.37 | 1.5 | 1.5 | 2.0 | 10.25 | 15.30 | 0.00 | 0.85 |
| TERRAZZO FINISHER | All | BLD | | 39.54 | 39.54 | 1.5 | 1.5 | 2.0 | 10.55 | 11.79 | 0.00 | 0.67 |
| TERRAZZO MASON | All | BLD | | 43.38 | 43.38 | 1.5 | 1.5 | 2.0 | 10.55 | 13.13 | 0.00 | 0.79 |
| TILE MASON | All | BLD | | 43.84 | 47.84 | 1.5 | 1.5 | 2.0 | 10.55 | 11.40 | 0.00 | 0.99 |
| TRAFFIC SAFETY WRKR | All | HWY | | 33.50 | 35.10 | 1.5 | 1.5 | 2.0 | 8.10 | 7.62 | 0.00 | 0.25 |
| TRUCK DRIVER | All | All | 1 | 36.30 | 36.85 | 1.5 | 1.5 | 2.0 | 8.10 | 9.76 | 0.00 | 0.15 |
| TRUCK DRIVER | All | All | 2 | 36.45 | 36.85 | 1.5 | 1.5 | 2.0 | 8.10 | 9.76 | 0.00 | 0.15 |
| TRUCK DRIVER | All | All | 3 | 36.65 | 36.85 | 1.5 | 1.5 | 2.0 | 8.10 | 9.76 | 0.00 | 0.15 |
| TRUCK DRIVER | All | All | 4 | 36.85 | 36.85 | 1.5 | 1.5 | 2.0 | 8.10 | 9.76 | 0.00 | 0.15 |
| TUCKPOINTER | All | BLD | | 43.62 | 44.62 | 1.5 | 1.5 | 2.0 | 10.25 | 14.11 | 0.00 | 0.48 |

Explanations

DUPAGE COUNTY

IRON WORKERS AND FENCE ERECTOR (WEST) - West of Route 53.

The following list is considered as those days for which holiday rates of wages for work performed apply: New Years Day, Memorial Day, Fourth of July, Labor Day, Thanksgiving Day, Christmas Day and Veterans Day in some classifications/counties. Generally, any of these holidays which fall on a Sunday is celebrated on the following Monday. This then makes work performed on that Monday payable at the appropriate overtime rate for holiday pay. Common practice in a given local may alter certain days of celebration. If in doubt, please check with IDOL.

EXPLANATION OF CLASSES

ASBESTOS - GENERAL - removal of asbestos material/mold and hazardous materials from any place in a building, including mechanical systems where those mechanical systems are to be removed. This includes the removal of asbestos materials/mold and hazardous materials from

ductwork or pipes in a building when the building is to be demolished at the time or at some close future date.

ASBESTOS - MECHANICAL - removal of asbestos material from mechanical systems, such as pipes, ducts, and boilers, where the mechanical systems are to remain.

TRAFFIC SAFETY - work associated with barricades, horses and drums used to reduce lane usage on highway work, the installation and removal of temporary lane markings, and the installation and removal of temporary road signs.

CERAMIC TILE FINISHER

The grouting, cleaning, and polishing of all classes of tile, whether for interior or exterior purposes, all burned, glazed or unglazed products; all composition materials, granite tiles, warning detectable tiles, cement tiles, epoxy composite materials, pavers, glass, mosaics, fiberglass, and all substitute materials, for tile made in tile-like units; all mixtures in tile like form of cement, metals, and other materials that are for and intended for use as a finished floor

surface, stair treads, promenade roofs, walks, walls, ceilings, swimming pools, and all other places where tile is to form a finished interior or exterior. The mixing of all setting mortars including but not limited to thin-set mortars, epoxies, wall mud, and any other sand and cement mixtures or adhesives when used in the preparation, installation, repair, or maintenance of tile and/or similar materials. The handling and unloading of all sand, cement, lime, tile, fixtures, equipment, adhesives, or any other materials to be used in the preparation, installation, repair, or maintenance of tile and/or similar materials. Ceramic Tile Finishers shall fill all joints and voids regardless of method on all tile work, particularly and especially after installation of said tile work. Application of any and all protective coverings to all types of tile installations including, but not be limited to, all soap compounds, paper products, tapes, and all polyethylene coverings, plywood, masonite, cardboard, and any new type of products that may be used to protect tile installations, Blastrac equipment, and all floor scarifying equipment used in preparing floors to receive tile. The clean up and removal of all waste and materials. All demolition of existing tile floors and walls to be re-tiled.

COMMUNICATIONS TECHNICIAN

Low voltage installation, maintenance and removal of telecommunication facilities (voice, sound, data and video) including telephone and data inside wire, interconnect, terminal equipment, central offices, PABX, fiber optic cable and equipment, micro waves, V-SAT, bypass, CATV, WAN (wide area networks), LAN (local area networks), and ISDN (integrated system digital network), pulling of wire in raceways, but not the installation of raceways.

MARBLE FINISHER

Loading and unloading trucks, distribution of all materials (all stone, sand, etc.), stocking of floors with material, performing all rigging for heavy work, the handling of all material that may be needed for the installation of such materials, building of scaffolding, polishing if needed, patching, waxing of material if damaged, pointing up, caulking, grouting and cleaning of marble, holding water on diamond or Carborundum blade or saw for setters cutting, use of tub saw or any other saw needed for preparation of material, drilling of holes for wires that anchor material set by

setters, mixing up of molding plaster for installation of material, mixing up thin set for the installation of material, mixing up of sand to cement for the installation of material and such other work as may be required in helping a Marble Setter in the handling of all material in the erection or installation of interior marble, slate, travertine, art marble, serpentine, alberene stone, blue stone, granite and other stones (meaning as to stone any foreign or domestic materials as are specified and used in building interiors and exteriors and customarily known as stone in the trade), carrara, sanionyx, vitrolite and similar opaque glass and the laying of all marble tile, terrazzo tile, slate tile and precast tile, steps, risers treads, base, or any other materials that may be used as substitutes for any of the aforementioned materials and which are used on interior and exterior which are installed in a similar manner.

MATERIAL TESTER I: Hand coring and drilling for testing of materials; field inspection of uncured concrete and asphalt.

MATERIAL TESTER II: Field inspection of welds, structural steel, fireproofing, masonry, soil, facade, reinforcing steel, formwork, cured concrete, and concrete and asphalt batch plants; adjusting

proportions of bituminous mixtures.

OPERATING ENGINEER - BUILDING

Class 1. Asphalt Plant; Asphalt Spreader; Autograde; Backhoes with Caisson Attachment; Batch Plant; Benoto (requires Two Engineers); Boiler and Throttle Valve; Caisson Rigs; Central Redi-Mix Plant; Combination Back Hoe Front End-loader Machine; Compressor and Throttle Valve; Concrete Breaker (Truck Mounted); Concrete Conveyor; Concrete Conveyor (Truck Mounted); Concrete Paver Over 27E cu. ft; Concrete Paver 27E cu. ft. and Under: Concrete Placer; Concrete Placing Boom; Concrete Pump (Truck Mounted); Concrete Tower; Cranes, All; Cranes, Hammerhead; Cranes, (GCI and similar Type); Creter Crane; Spider Crane; Crusher, Stone, etc.; Derricks, All; Derricks, Traveling; Formless Curb and Gutter Machine; Grader, Elevating; Grouting Machines; Heavy Duty Self-Propelled Transporter or Prime Mover; Highlift Shovels or Front Endloader 2-1/4 yd. and over; Hoists, Elevators, outside type rack and pinion and similar machines; Hoists, One, Two and Three Drum; Hoists, Two Tugger One Floor; Hydraulic Backhoes; Hydraulic Boom Trucks; Hydro Vac (and similar equipment); Locomotives, All; Motor Patrol; Lubrication Technician; Manipulators;

Pile Drivers and Skid Rig; Post Hole Digger; Pre-Stress Machine; Pump Cretes Dual Ram; Pump Cretes: Squeeze Cretes-Screw Type Pumps; Gypsum Bulker and Pump; Raised and Blind Hole Drill; Roto Mill Grinder; Scoops - Tractor Drawn; Slip-Form Paver; Straddle Buggies; Operation of Tie Back Machine; Tournapull; Tractor with Boom and Side Boom; Trenching Machines.

Class 2. Boilers; Broom, All Power Propelled; Bulldozers; Concrete Mixer (Two Bag and Over); Conveyor, Portable; Forklift Trucks; Highlift Shovels or Front Endloaders under 2-1/4 yd.; Hoists, Automatic; Hoists, Inside Elevators; Hoists, Sewer Dragging Machine; Hoists, Tugger Single Drum; Laser Screed; Rock Drill (Self-Propelled); Rock Drill (Truck Mounted); Rollers, All; Steam Generators; Tractors, All; Tractor Drawn Vibratory Roller; Winch Trucks with "A" Frame.

Class 3. Air Compressor; Combination Small Equipment Operator; Generators; Heaters, Mechanical; Hoists, Inside Elevators (remodeling or renovation work); Hydraulic Power Units (Pile Driving, Extracting, and Drilling); Pumps, over 3" (1 to 3 not to exceed a total of 300 ft.); Low Boys; Pumps, Well Points; Welding Machines (2 through 5); Winches, 4 Small Electric Drill Winches.

Class 4. Bobcats and/or other Skid Steer Loaders; Oilers; and Brick Forklift.

Class 5. Assistant Craft Foreman.

Class 6. Gradall.

Class 7. Mechanics; Welders.

OPERATING ENGINEERS - HIGHWAY CONSTRUCTION

Class 1. Asphalt Plant; Asphalt Heater and Planer Combination; Asphalt Heater Scarfire; Asphalt Spreader; Autograder/GOMACO or other similar type machines: ABG Paver; Backhoes with Caisson Attachment; Ballast Regulator; Belt Loader; Caisson Rigs; Car Dumper; Central Redi-Mix Plant; Combination Backhoe Front Endloader Machine, (1 cu. yd. Backhoe Bucket or over or with attachments); Concrete Breaker (Truck Mounted); Concrete Conveyor; Concrete Paver over 27E cu. ft.; Concrete Placer; Concrete Tube Float; Cranes, all attachments; Cranes, Tower

Cranes of all types: Creter Crane: Spider Crane; Crusher, Stone, etc.; Derricks, All; Derrick Boats; Derricks, Traveling; Dredges; Elevators, Outside type Rack & Pinion and Similar Machines; Formless Curb and Gutter Machine; Grader, Elevating; Grader, Motor Grader, Motor Patrol, Auto Patrol, Form Grader, Pull Grader, Subgrader; Guard Rail Post Driver Truck Mounted; Hoists, One, Two and Three Drum; Heavy Duty Self-Propelled Transporter or Prime Mover; Hydraulic Backhoes; Backhoes with shear attachments up to 40' of boom reach; Lubrication Technician; Manipulators; Mucking Machine; Pile Drivers and Skid Rig; Pre-Stress Machine; Pump Cretes Dual Ram; Rock Drill - Crawler or Skid Rig; Rock Drill - Truck Mounted; Rock/Track Tamper; Roto Mill Grinder; Slip-Form Paver; Snow Melters; Soil Test Drill Rig (Truck Mounted); Straddle Buggies; Hydraulic Telescoping Form (Tunnel); Operation of Tieback Machine; Tractor Drawn Belt Loader; Tractor Drawn Belt Loader (with attached pusher - two engineers); Tractor with Boom; Tractaire with Attachments; Traffic Barrier Transfer Machine; Trenching; Truck Mounted Concrete Pump with Boom; Raised or Blind Hole Drills (Tunnel Shaft); Underground Boring and/or Mining Machines 5 ft. in diameter and over tunnel, etc; Underground Boring and/or Mining Machines under 5 ft. in diameter; Wheel Excavator; Widener (APSCO).

Class 2. Batch Plant; Bituminous Mixer; Boiler and Throttle Valve; Bulldozers; Car Loader Trailing Conveyors; Combination Backhoe Front Endloader Machine (Less than 1 cu. yd. Backhoe Bucket or over or with attachments); Compressor and Throttle Valve; Compressor, Common Receiver (3); Concrete Breaker or Hydro Hammer; Concrete Grinding Machine; Concrete Mixer or Paver 7S Series to and including 27 cu. ft.; Concrete Spreader; Concrete Curing Machine, Burlap Machine, Belting Machine and Sealing Machine; Concrete Wheel Saw; Conveyor Muck Cars (Haglund or Similar Type); Drills, All; Finishing Machine - Concrete; Highlift Shovels or Front Endloader; Hoist - Sewer Dragging Machine; Hydraulic Boom Trucks (All Attachments); Hydro-Blaster; Hydro Excavating (excluding hose work); Laser Screed; All Locomotives, Dinky; Off-Road Hauling Units (including articulating) Non Self-Loading Ejection Dump; Pump Cretes: Squeeze Cretes - Screw Type Pumps, Gypsum Bulker and Pump; Roller, Asphalt; Rotary Snow Plows; Rototiller, Seaman, etc., self-propelled; Self-Propelled Compactor; Spreader - Chip - Stone, etc.; Scraper - Single/Twin Engine/Push and Pull; Scraper - Prime Mover in Tandem (Regardless of Size); Tractors pulling attachments, Sheeps Foot, Disc, Compactor, etc.; Tug Boats.

Class 3. Boilers; Brooms, All Power Propelled; Cement Supply Tender;

Compressor, Common Receiver (2); Concrete Mixer (Two Bag and Over); Conveyor, Portable; Farm-Type Tractors Used for Mowing, Seeding, etc.; Forklift Trucks; Grouting Machine; Hoists, Automatic; Hoists, All Elevators; Hoists, Tugger Single Drum; Jeep Diggers; Low Boys; Pipe Jacking Machines; Post-Hole Digger; Power Saw, Concrete Power Driven; Pug Mills; Rollers, other than Asphalt; Seed and Straw Blower; Steam Generators; Stump Machine; Winch Trucks with "A" Frame; Work Boats; Tamper-Form-Motor Driven.

Class 4. Air Compressor; Combination - Small Equipment Operator; Directional Boring Machine; Generators; Heaters, Mechanical; Hydraulic Power Unit (Pile Driving, Extracting, or Drilling); Light Plants, All (1 through 5); Pumps, over 3" (1 to 3 not to exceed a total of 300 ft.); Pumps, Well Points; Vacuum Trucks (excluding hose work); Welding Machines (2 through 5); Winches, 4 Small Electric Drill Winches.

Class 5. SkidSteer Loader (all); Brick Forklifts; Oilers.

Class 6. Field Mechanics and Field Welders

Class 7. Dowell Machine with Air Compressor; Gradall and machines of

like nature.

OPERATING ENGINEER - FLOATING

Diver. Diver Wet Tender, Diver Tender, ROV Pilot, ROV Tender

SURVEY WORKER - Operated survey equipment including data collectors, G.P.S. and robotic instruments, as well as conventional levels and transits.

TRUCK DRIVER - BUILDING, HEAVY AND HIGHWAY CONSTRUCTION

Class 1. Two or three Axle Trucks. A-frame Truck when used for transportation purposes; Air Compressors and Welding Machines, including those pulled by cars, pick-up trucks and tractors; Ambulances; Batch Gate Lockers; Batch Hopperman; Car and Truck Washers; Carry-alls; Fork Lifts and Hoisters; Helpers; Mechanics Helpers and Greasers; Oil Distributors 2-man operation; Pavement Breakers; Pole Trailer, up to 40 feet; Power Mower Tractors; Self-propelled Chip Spreader; Skipman; Slurry Trucks, 2-man operation; Slurry Truck Conveyor Operation, 2 or 3 man; Teamsters;

Unskilled Dumpman; and Truck Drivers hauling warning lights, barricades, and portable toilets on the job site.

Class 2. Four axle trucks; Dump Crets and Adgetors under 7 yards; Dumpsters, Track Trucks, Euclids, Hug Bottom Dump Turnapulls or Turnatrailers when pulling other than self-loading equipment or similar equipment under 16 cubic yards; Mixer Trucks under 7 yeards; Ready-mix Plant Hopper Operator, and Winch Trucks, 2 Axles.

Class 3. Five axle trucks; Dump Crets and Adgetors 7 yards and over; Dumpsters, Track Trucks, Euclids, Hug Bottom Dump Turnatrailers or turnapulls when pulling other than self-loading equipment or similar equipment over 16 cubic yards; Explosives and/or Fission Material Trucks; Mixer Trucks 7 yards or over; Mobile Cranes while in transit; Oil Distributors, 1-man operation; Pole Trailer, over 40 feet; Pole and Expandable Trailers hauling material over 50 feet long; Slurry trucks, 1-man operation; Winch trucks, 3 axles or more; Mechanic--Truck Welder and Truck Painter.

Class 4. Six axle trucks; Dual-purpose vehicles, such as mounted crane trucks with hoist and accessories; Foreman; Master Mechanic;

Self-loading equipment like P.B. and trucks with scoops on the front.

TERRAZZO FINISHER

The handling of sand, cement, marble chips, and all other materials that may be used by the Mosaic Terrazzo Mechanic, and the mixing, grinding, grouting, cleaning and sealing of all Marble, Mosaic, and Terrazzo work, floors, base, stairs, and wainscoting by hand or machine, and in addition, assisting and aiding Marble, Masonic, and Terrazzo Mechanics.

Other Classifications of Work:

For definitions of classifications not otherwise set out, the Department generally has on file such definitions which are available. If a task to be performed is not subject to one of the classifications of pay set out, the Department will upon being contacted state which neighboring county has such a classification and

provide such rate, such rate being deemed to exist by reference in this document. If no neighboring county rate applies to the task, the Department shall undertake a special determination, such special determination being then deemed to have existed under this determination. If a project requires these, or any classification not listed, please contact IDOL at 217-782-1710 for wage rates or clarifications.

LANDSCAPING

Landscaping work falls under the existing classifications for laborer, operating engineer and truck driver. The work performed by landscape plantsman and landscape laborer is covered by the existing classification of laborer. The work performed by landscape operators (regardless of equipment used or its size) is covered by the classifications of operating engineer. The work performed by landscape truck drivers (regardless of size of truck driven) is covered by the classifications of truck driver.

MATERIAL TESTER & MATERIAL TESTER/INSPECTOR I AND II

Notwithstanding the difference in the classification title, the classification entitled "Material Tester I" involves the same job duties as the classification entitled "Material Tester/Inspector I". Likewise, the classification entitled "Material Tester II" involves the same job duties as the classification entitled "Material Tester/Inspector II".

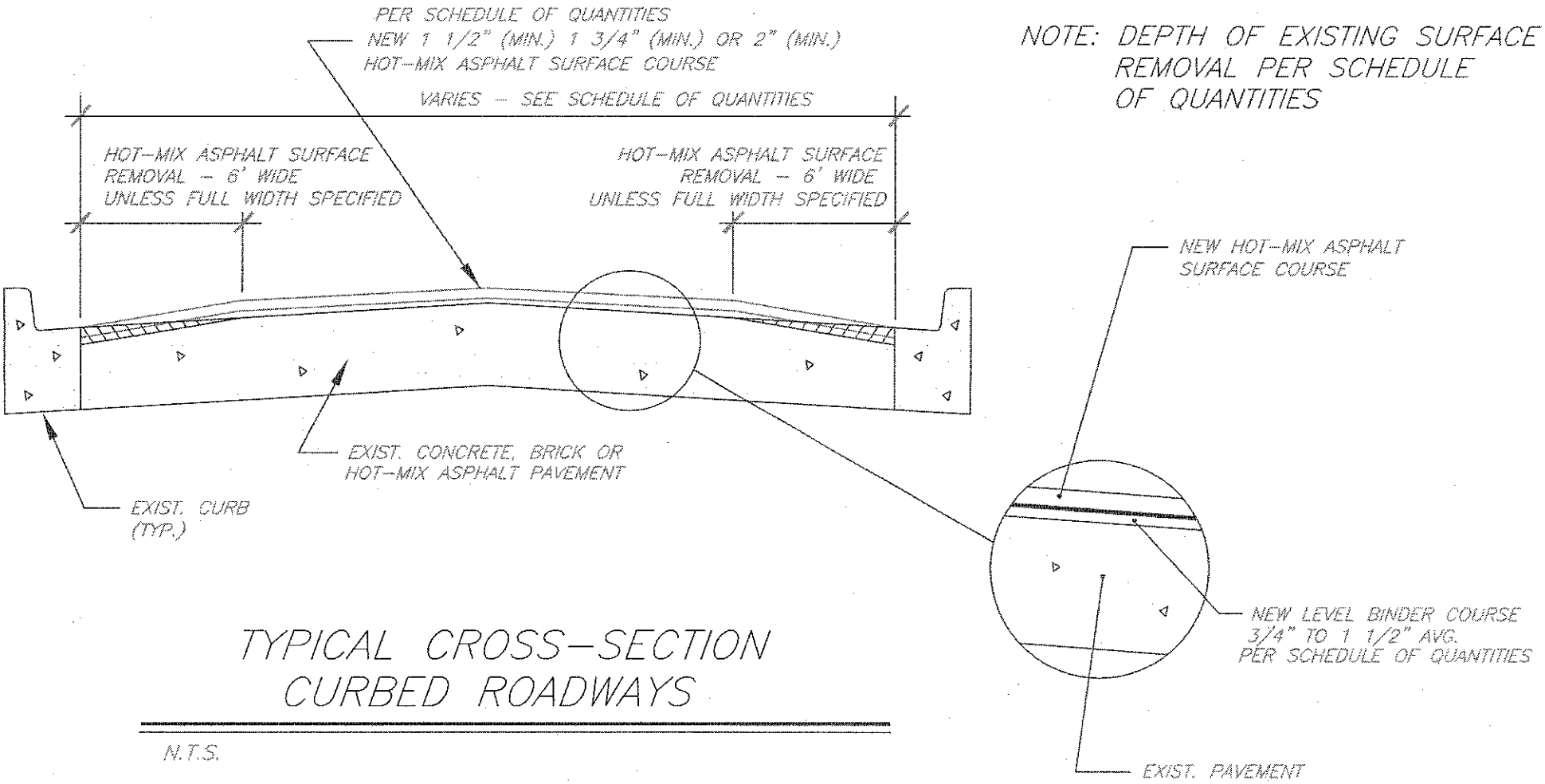


NOTE: DEPTH OF EXISTING SURFACE REMOVAL PER SCHEDULE OF QUANTITIES

# TYPICAL CROSS-SECTION CURBED ROADWAYS

N.T.S.

R.W.B
06/08/05
C:\CADFILES\RESURFACING\DETAILS

Village of DOWNERS GROVE

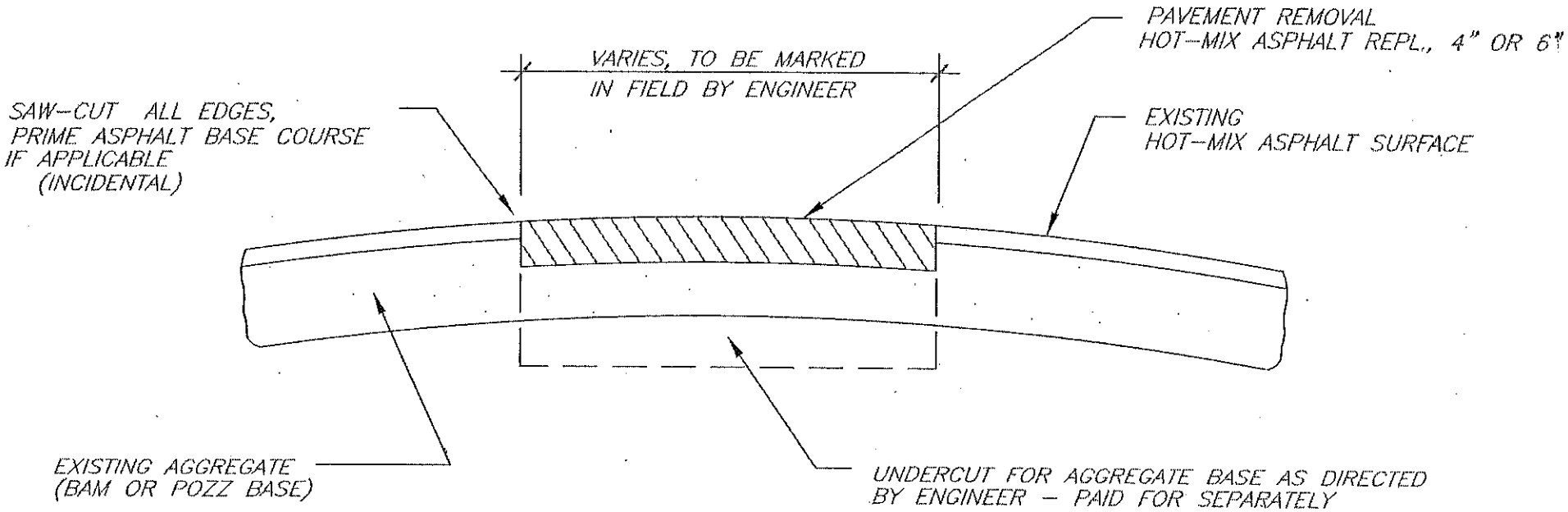


# CLASS D PATCHES, 4" or 6"

N.T.S.

R.W.B
06/08/05
C:\CADFILES\RESURFACING\DETAILS

Village of DOWNERS GROVE

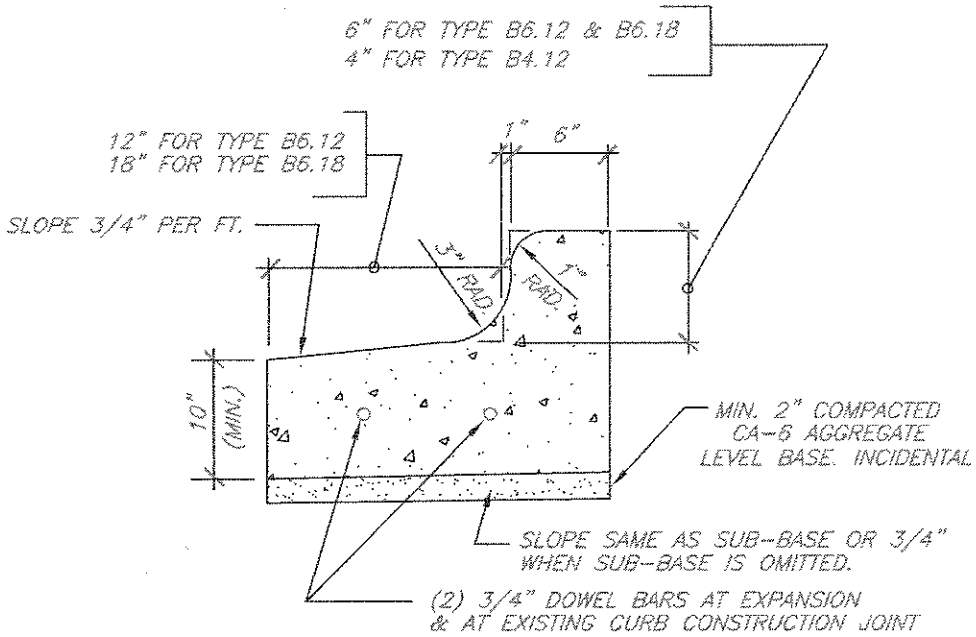


BARRIER CURB WITH REVERSED PITCH

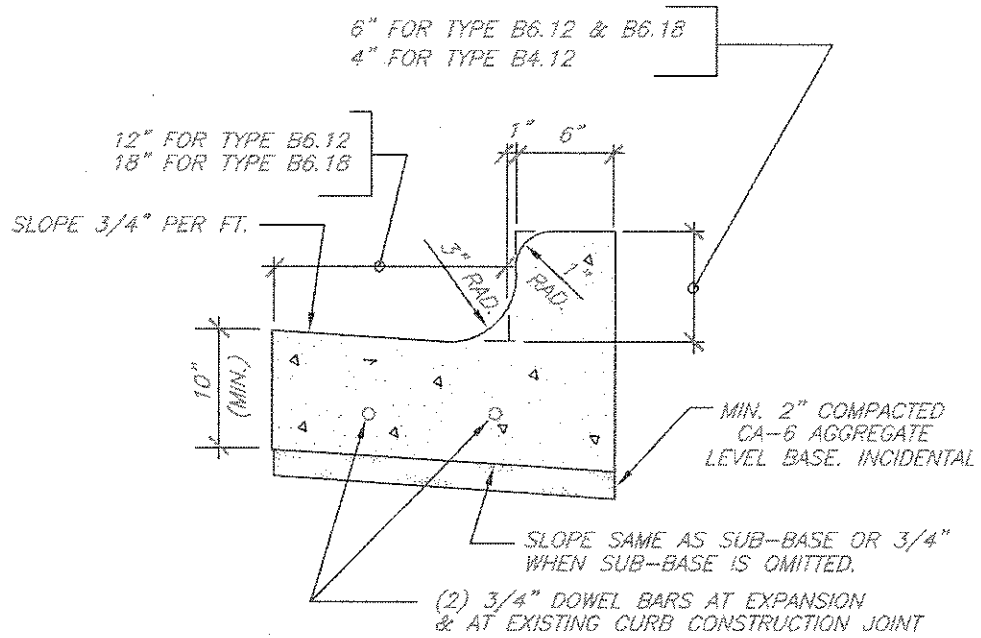


BARRIER CURB

# COMBINATION CONCRETE CURB AND GUTTER – BARRIER

N.T.S.

| JOINT SPACING ON CENTERS: |
| --- |
| 15' FOR CONTRACTIONS<br>90' FOR EXPANSION |

WHERE APPLICABLE NEW CURB SHALL BE TIED TO ADJACENT CONCRETE PAVEMENT OR BASE WITH NO. 6 (3/4") BARS AT 24" CENTERS IN ACCORDANCE WITH DETAILS FOR LONGITUDINAL CONSTRUCTION JOINT SHOWN ON STANDARD 420001

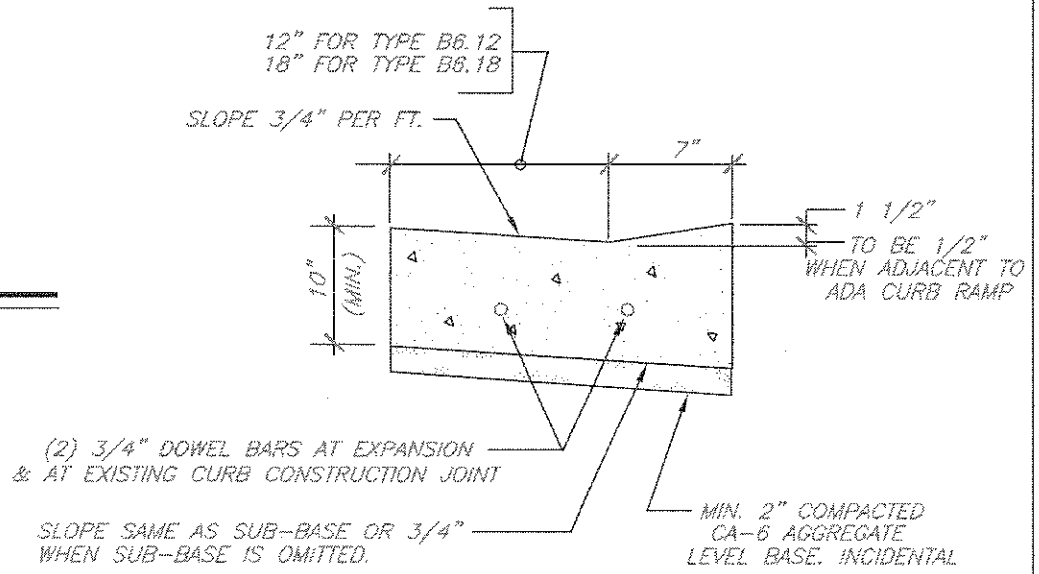


DEPRESSED CURB

Village of DOWNERS GROVE

S.A.F
03/04/08
I:\PW-ENG & TRANSPORTATION\CAD-FILES\RESURFACING\2008 DETAILS.DWG

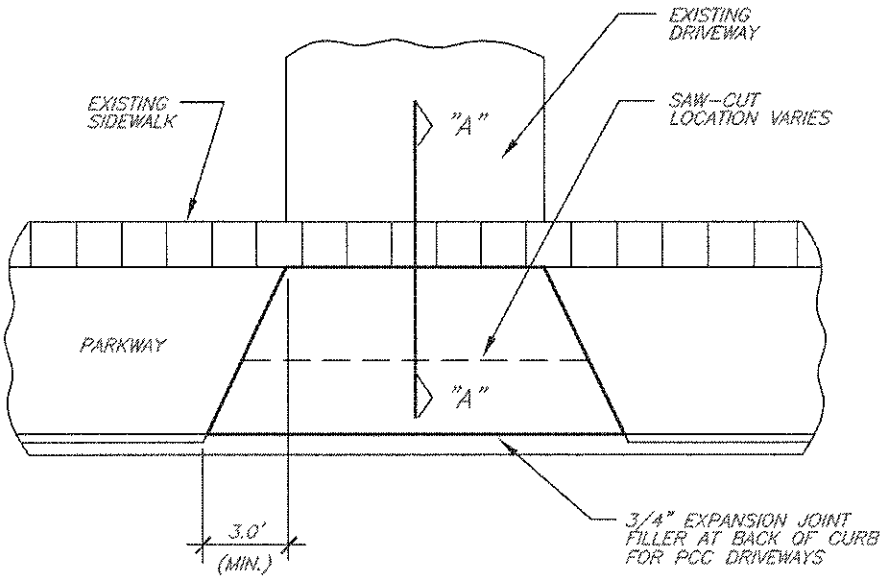


PLAN

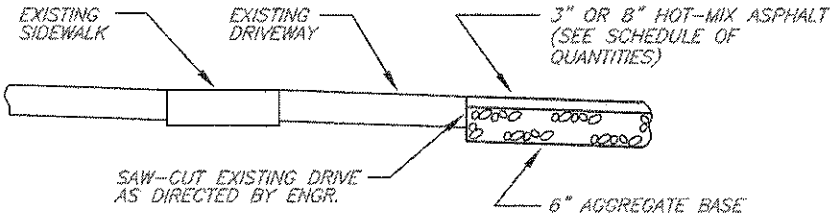


SECTION "A - A"

ASPHALT DRIVE

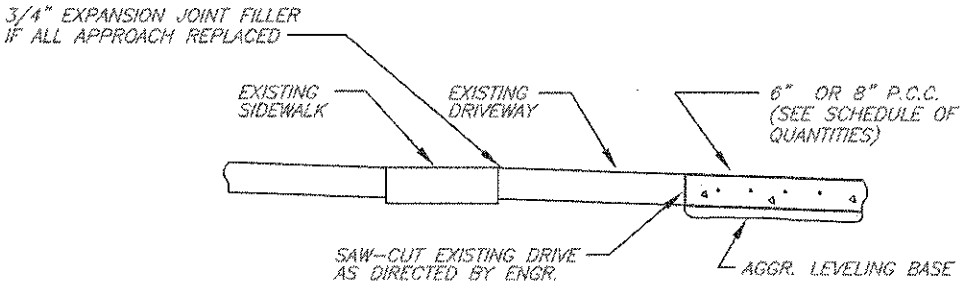


SECTION "A - A"

CONCRETE DRIVE

# DRIVEWAY REMOVAL & REPLACEMENT

N.T.S.

R.W.B
06/08/05
C:\CADFILES\RESURFACING\DETAILS

Village of DOWNERS GROVE

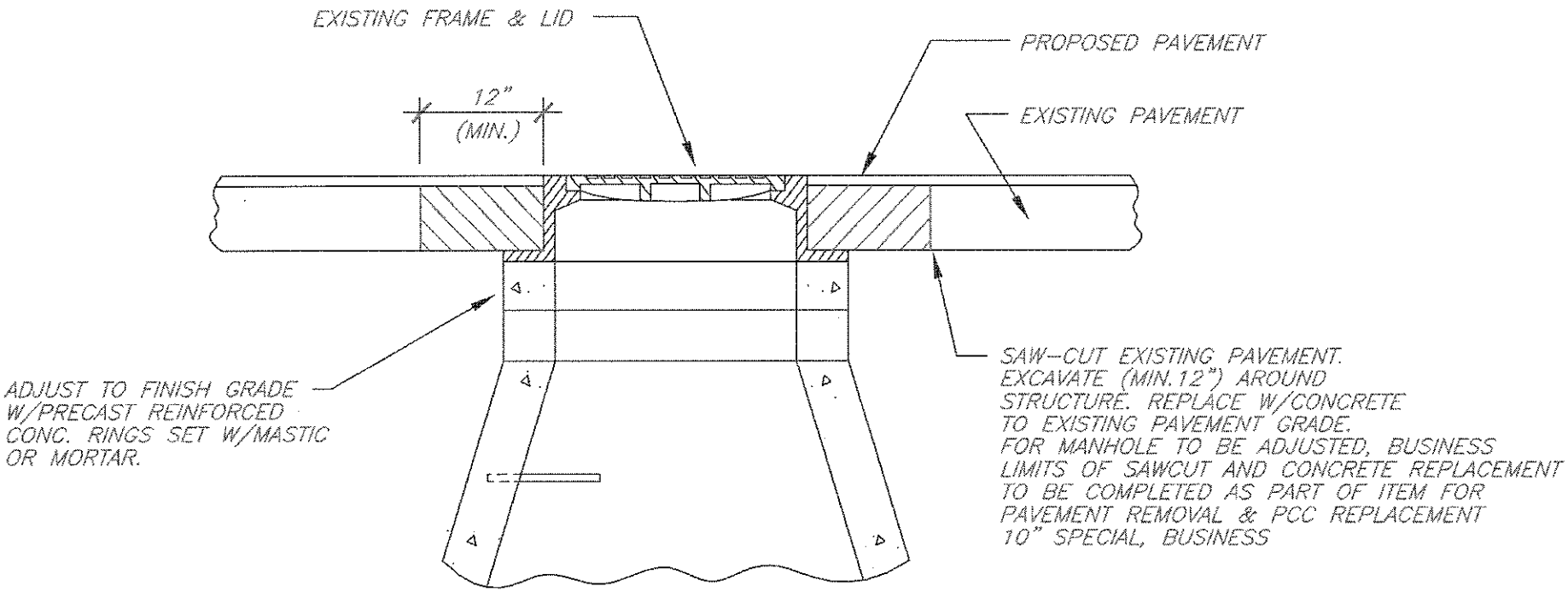


NOTES:

1. AFTER MANHOLE HAS BEEN ADJUSTED AND IF STREET IS OPEN TO TRAFFIC, A TYPE 1 BARRICADE W/FLASHER SHALL BE PLACED AT EACH MANHOLE.

2. SANITARY MANHOLE AND MANHOLE TO BE ADJUSTED, BUSINESS TO BE SET W/MASTIC

# MANHOLE ADJUSTMENT DETAIL

N.T.S.

S.A.F
03/04/08
I:\PW-ENG & TRANSPORTATION\CAD-FILES\RESURFACING\2008 DETAILS.DWG

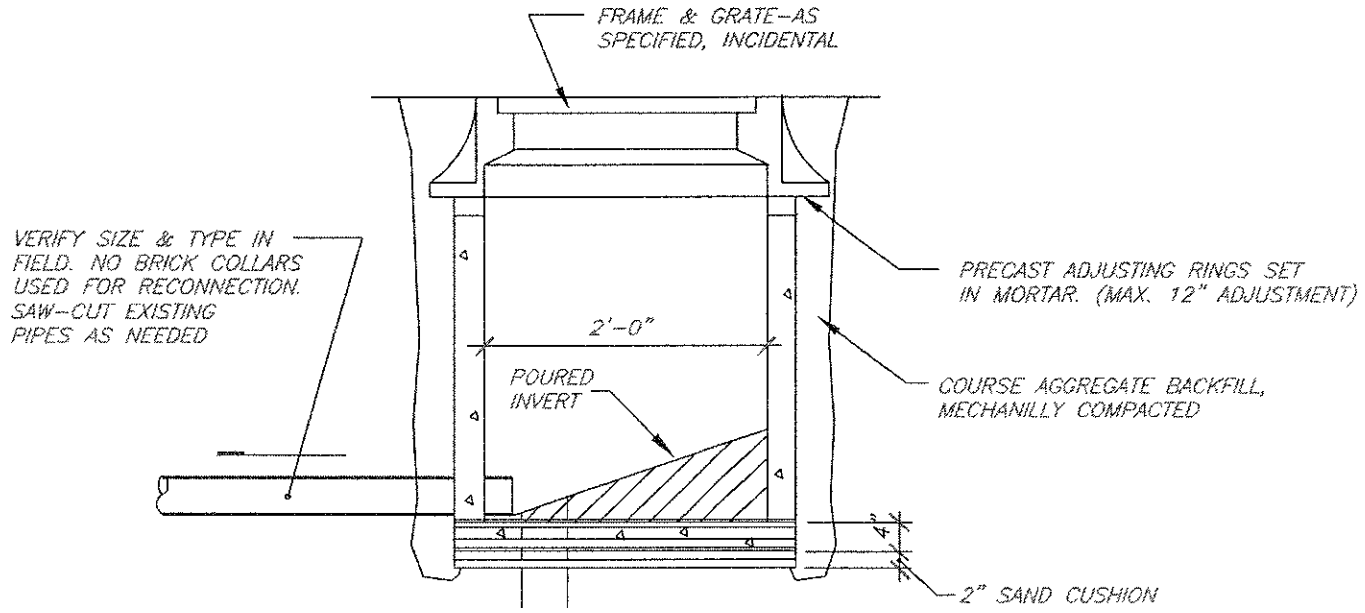


NOTE: INSIDE WALL OF INLET TO BE FLUSH WITH FACE OF CURB FOR TYPE I FRAME OR BACK OF CURB FOR TYPE 3 & TYPE II FRAME

# TYPE "A" INLET NEW/REPLACEMENT

N.T.S.

R.W.B
06/08/05
C:\CADFILES\RESURFACING\DETAILS

Village of DOWNERS GROVE

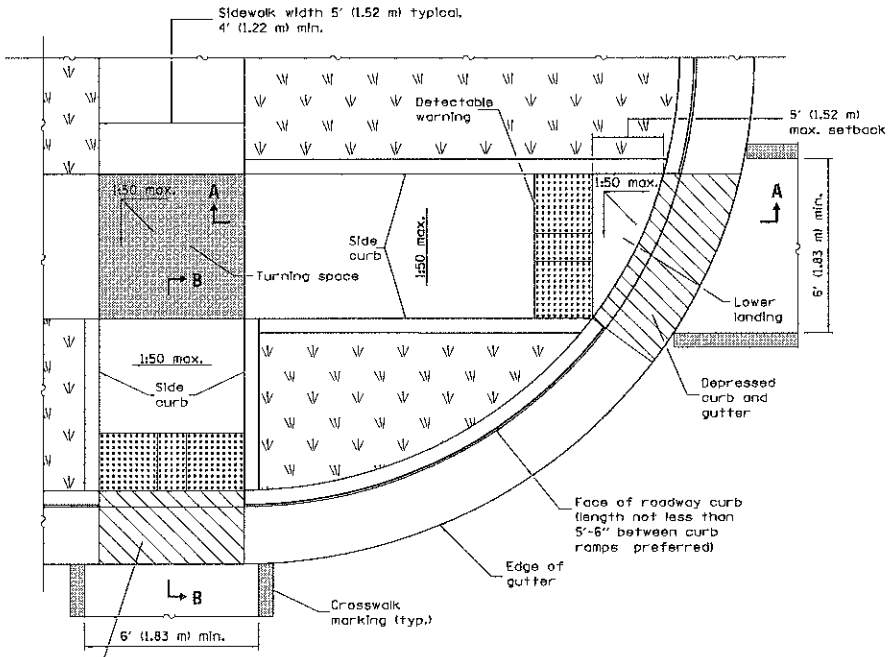


## RAMPS IN LANDSCAPED AREA
## SETBACK ≤ 5'

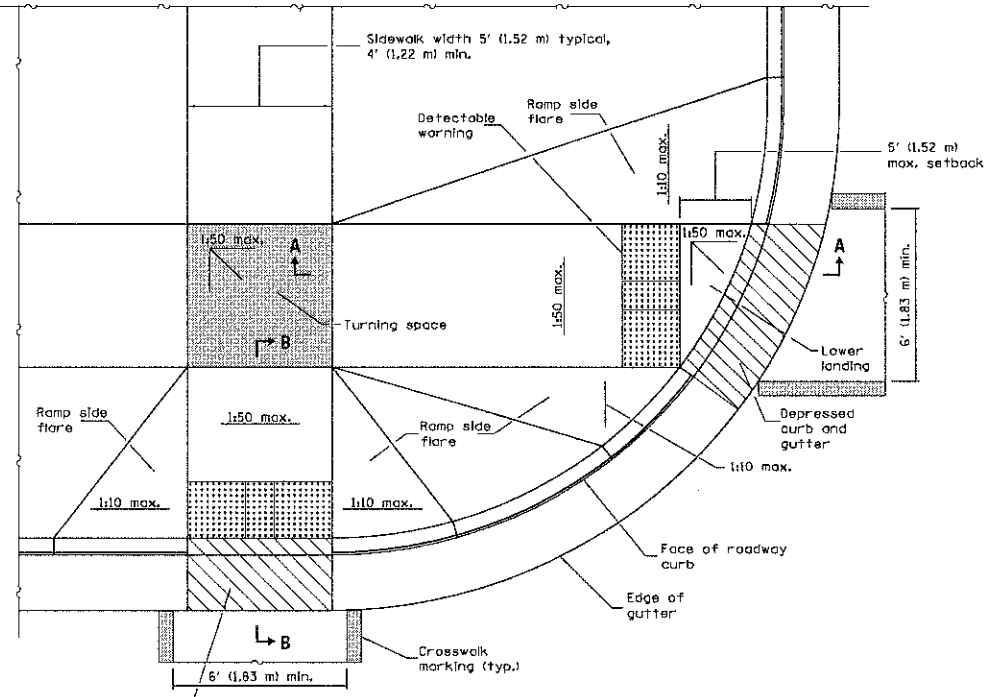


## RAMPS IN PAVED AREA
## SETBACK ≤ 5'

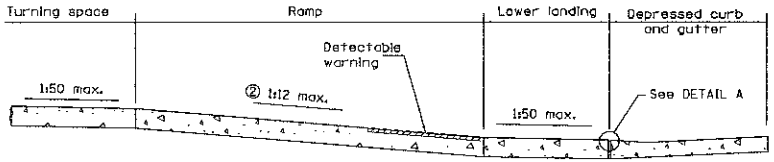


## SECTION A–A

② The running slope of the curb ramp shall not require the ramp length to exceed 15' (4.5 m).

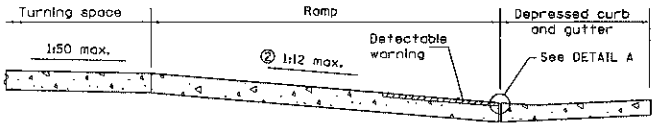


## SECTION B–B

② The running slope of the curb ramp shall not require the ramp length to exceed 15' (4.5 m).

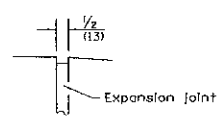


## DETAIL A

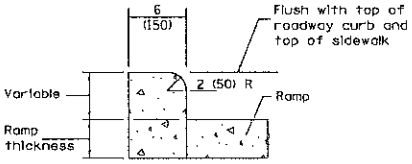


## SIDE CURB DETAIL

See Sheet 2 for GENERAL NOTES.

| DATE | REVISIONS |
|---|---|
| 1-1-17 | Added 2' dimension to det. |
| | warnings for setbacks |
| | greater than 5'. |
| 1-1-15 | ① not appl. to int. sidewalks. |
| | Rev. gen. notes. Ch'd Upper |
| | landing to Turning space. |

# PERPENDICULAR CURB RAMPS FOR SIDEWALKS

(Sheet 1 of 2)

STANDARD 424001-09

Illinois Department of Transportation

PASSED January 1, 2017
Michael Brand
ENGINEER OF POLICY AND PROCEDURES

APPROVED January 1, 2017
Wanceen M. Bolds
ENGINEER OF DESIGN AND ENVIRONMENT

ISSUED 1-1-97

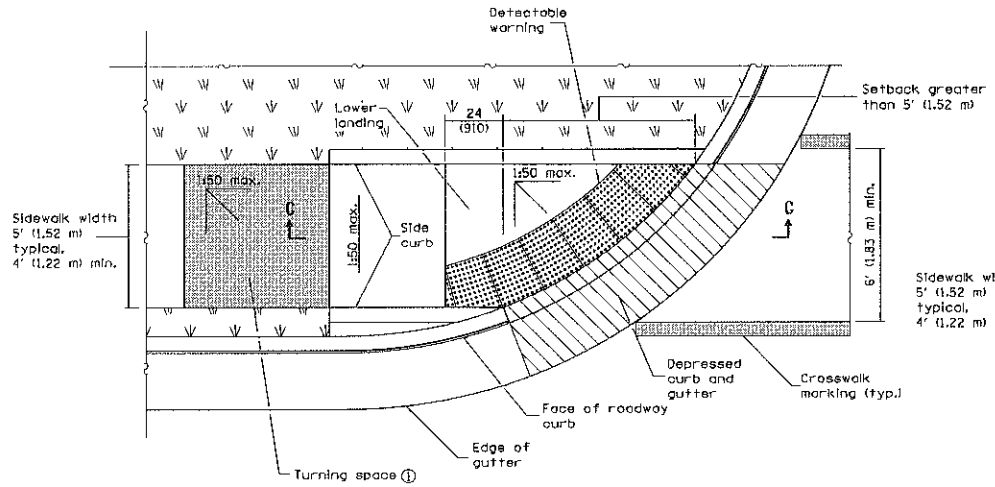


## RAMP IN LANDSCAPED AREA
## SETBACK > 5'

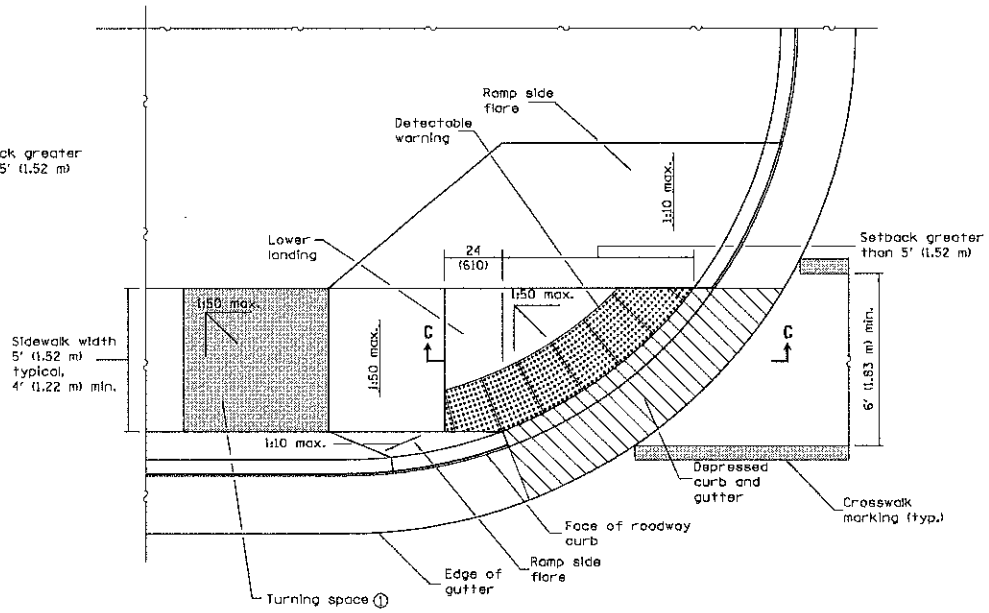


## RAMP IN PAVED AREA
## SETBACK > 5'

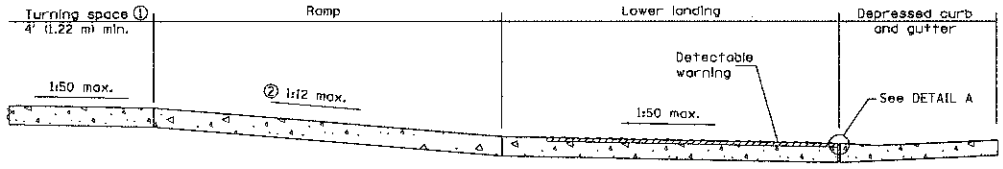


## SECTION C–C

① Turning space not required for ramp slopes flatter than 1:20.

② The running slope of the curb ramp shall not require the ramp length to exceed 15' (4.5 m).

## GENERAL NOTES

All slope ratios are expressed as units of vertical displacement to units of horizontal displacement (V:H).

Where the turning space is constrained on a side opposite a ramp, the minimum length of the turning space in the direction of the ramp-run shall be 5' (1.52 m).

Where 1:50 maximum slope is shown, 1:64 is preferred.

See Standard 606001 for details of depressed curb adjacent to curb ramp.

All dimensions are in inches (millimeters) unless otherwise shown.

Illinois Department of Transportation

PASSED January 1, 2017
ENGINEER OF POLICY AND PROCEDURES

APPROVED January 1, 2017
ENGINEER OF DESIGN AND ENVIRONMENT

ISSUED 1-1-97

# PERPENDICULAR CURB RAMPS FOR SIDEWALKS

(Sheet 2 of 2)

STANDARD 424001-09

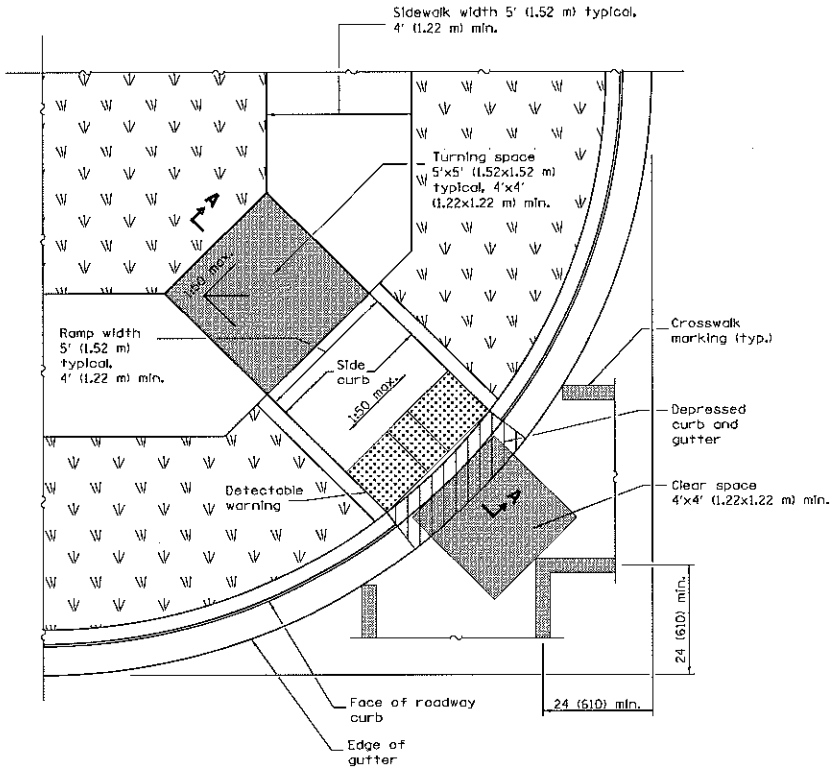


## RAMP IN LANDSCAPED AREA

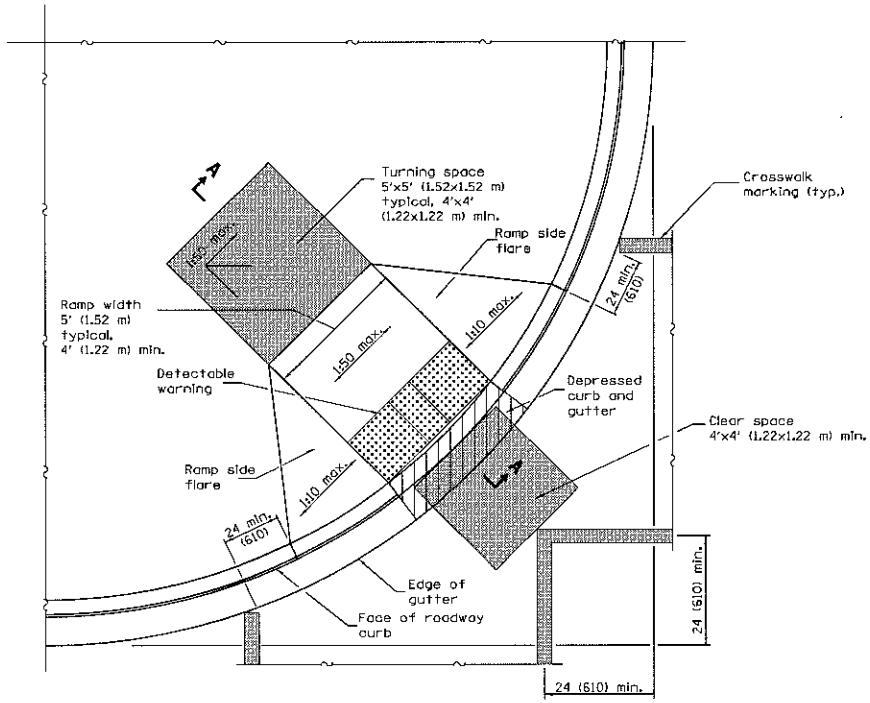


## RAMP IN PAVED AREA

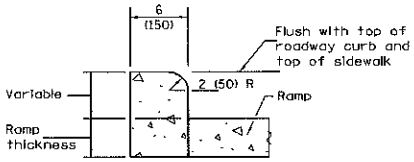


## SIDE CURB DETAIL

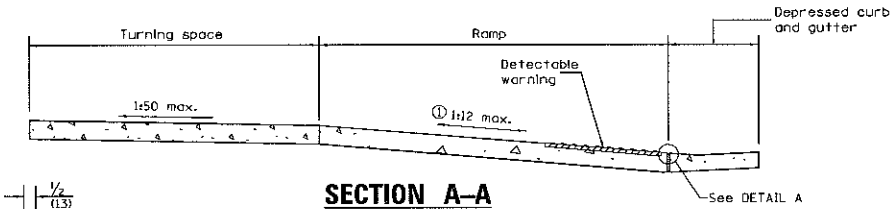


## SECTION A–A

① The running slope of the curb ramp shall not require the ramp length to exceed 15' (4.5 m).

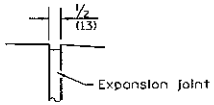


## DETAIL A

## GENERAL NOTES

This Standard shall only be used for curb radii of 20 ft. (6.1 m) or greater.

Where the turning space is constrained on a side opposite a ramp, the minimum length of the turning space in the direction of the ramp-run shall be 5' (1.52 m).

Where 1:50 maximum slope is shown, 1:64 is preferred.

All slope ratios are expressed as units of vertical displacement to units of horizontal displacement (V:H).

See Standard 606001 for details of depressed curb adjacent to curb ramp.

All dimensions are in inches (millimeters) unless otherwise shown.

Illinois Department of Transportation

PASSED January 1, 2015
ENGINEER OF POLICY AND PROCEDURES
APPROVED January 1, 2015
ENGINEER OF DESIGN AND ENVIRONMENT

ISSUED 21-1-1

| DATE | REVISIONS |
|---|---|
| 1-1-15 | Changed 'Upper landing' to |
| | 'Turning space'. Added note |
| | reg. const. turning space. |
| 1-1-13 | Revised General Notes. |
| | |
| | |

# DIAGONAL CURB RAMPS FOR SIDEWALKS

STANDARD 424006–02

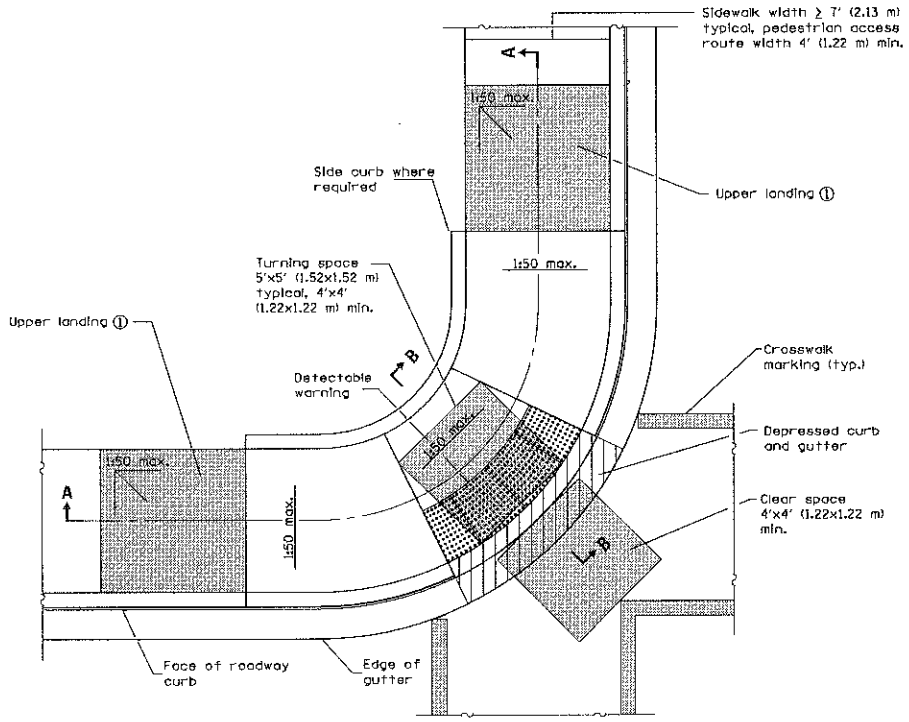


## CORNER PARALLEL CURB RAMP

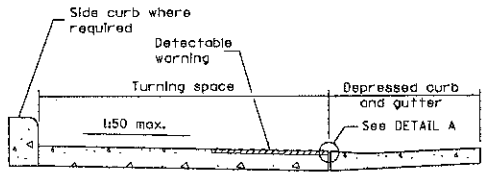


## SECTION B–B

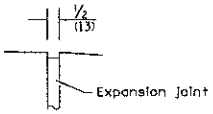


## DETAIL A

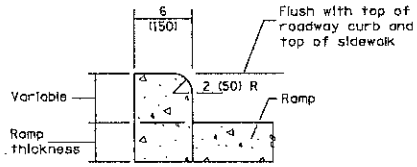


## SIDE CURB DETAIL

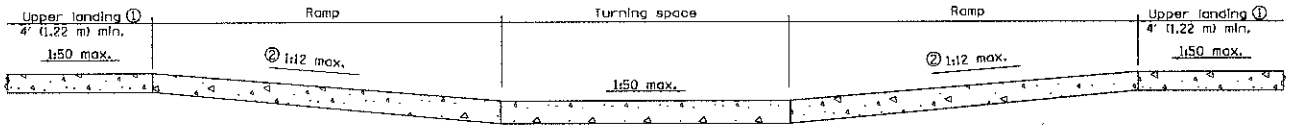


## SECTION A–A

① Upper landing(s) not required for ramp slopes flatter than 1:20.

② The running slope of the curb ramp shall not require the ramp length to exceed 15' (4.5 m).

## GENERAL NOTES

All slope ratios are expressed as units of vertical displacement to units of horizontal displacement (V:H).

Where the turning space is constrained on a side opposite a ramp, the minimum length of the turning space in the direction of the ramp-run shall be 5' (1.52 m).

Where 1:50 maximum slope is shown, 1:64 is preferred.

See Standard 606001 for details of depressed curb adjacent to curb ramp.

All dimensions are in inches (millimeters) unless otherwise shown.

Illinois Department of Transportation

PASSED January 1, 2017
ENGINEER OF POLICY AND PROCEDURES

APPROVED January 1, 2017
ENGINEER OF DESIGN AND ENVIRONMENT

ISSUED 21-1-1

| DATE | REVISIONS |
|---|---|
| 1-1-17 | Revised sidewalk width to |
| | include 24 (610) buffer |
| | behind curb. |
| 1-1-15 | Changed 'Lower landing' to |
| | 'Turning space'. Added x-walk |
| | markings. Added note ②. |

# CORNER PARALLEL CURB RAMPS FOR SIDEWALKS

STANDARD 424011-03

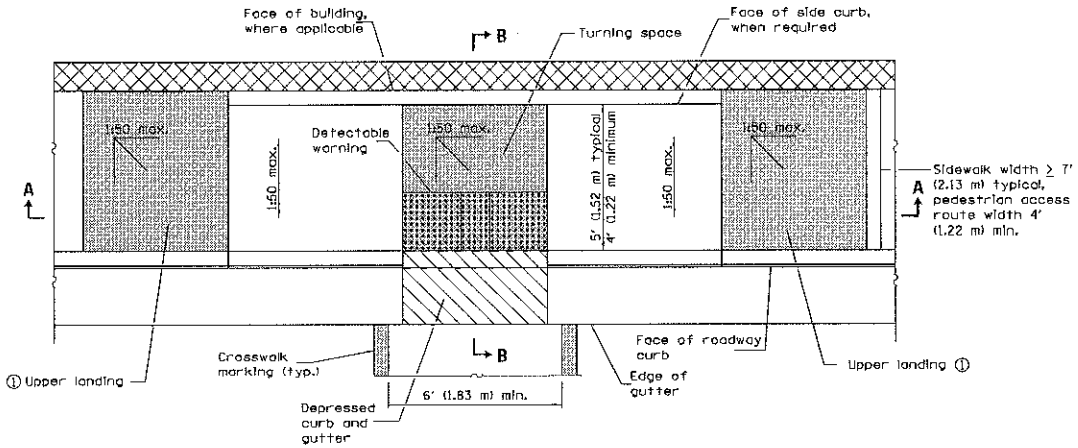


## PARALLEL MID-BLOCK CURB RAMP

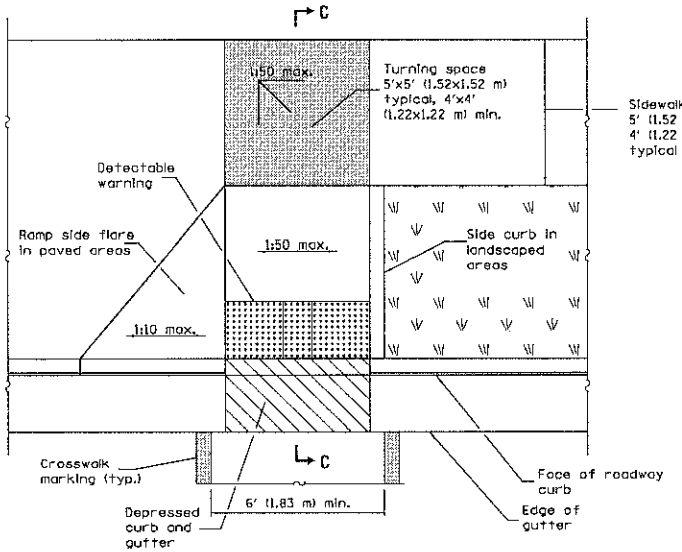


## PERPENDICULAR MID-BLOCK CURB RAMP

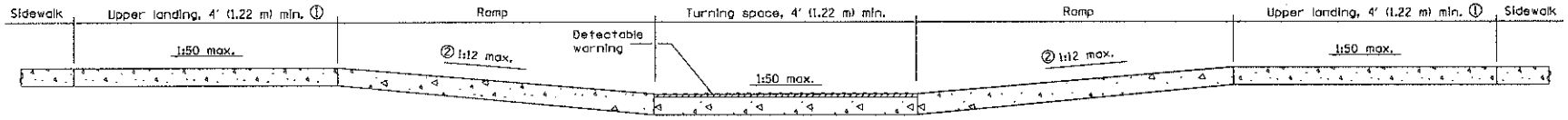


## SECTION A–A

① Upper landing(s) not required for ramp slopes flatter than 1:20.

② The running slope of the curb ramp shall not require the ramp length to exceed 15' (4.5 m).

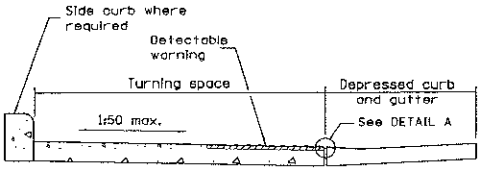


## SECTION B–B

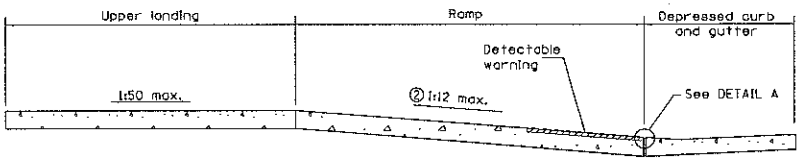


## SECTION C–C

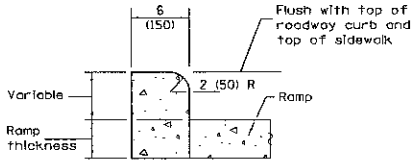


## SIDE CURB DETAIL

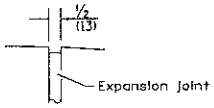


## DETAIL A

## GENERAL NOTES

All slope ratios are expressed as units of vertical displacement to units of horizontal displacement (V:H).

Where the turning space is constrained on a side opposite a ramp, the minimum length of the turning space in the direction of the ramp-run shall be 5' (1.52 m).

Where 1:50 maximum slope is shown, 1:64 is preferred.

See Standard 606001 for details of depressed curb adjacent to curb ramp.

All dimensions are in inches (millimeters) unless otherwise shown.

Illinois Department of Transportation

PASSED January 1, 2017
ENGINEER OF POLICY AND PROCEDURES

APPROVED January 1, 2017
ENGINEER OF DESIGN AND ENVIRONMENT

ISSUED 1-1-12

| DATE | REVISIONS |
|---|---|
| 1-1-17 | Revised sidewalk width to |
| | include 24 (610) buffer |
| | behind curb. |
| 1-1-13 | Widened crosswalk markings |
| | to 6' (1.83 m) min. inside |
| | dimension. Rev. Gen. Notes. |

# MID-BLOCK CURB RAMPS FOR SIDEWALKS

STANDARD 424016-03

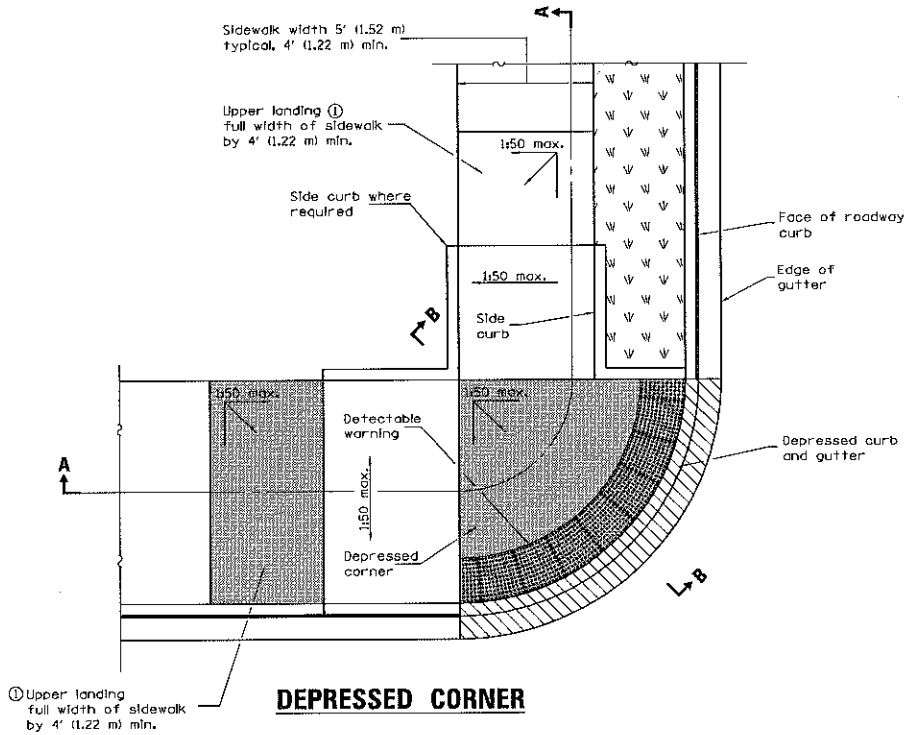


## DEPRESSED CORNER

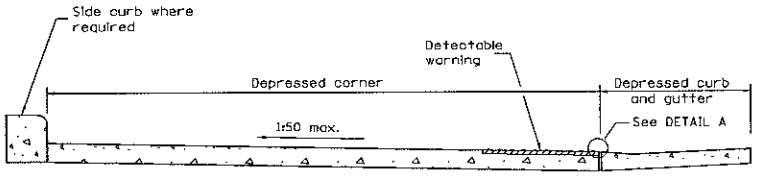


## SECTION B–B

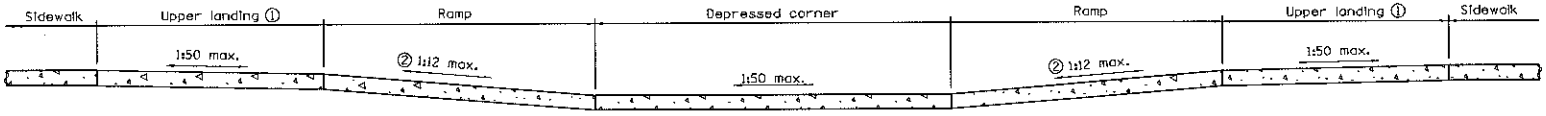


## SECTION A–A

① Upper landing(s) not required for ramp slopes flatter than 1:20.

② The running slope of the curb ramp shall not require the ramp length to exceed 15' (4.5 m).

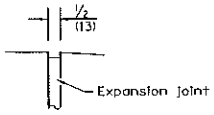


## DETAIL A

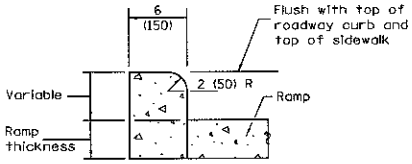


## SIDE CURB DETAIL

### GENERAL NOTES

This standard shall only be used for curb radii of 6 ft. (1.83 m) or greater.

All slope ratios are expressed as units of vertical displacement to units of horizontal displacement (V:H).

Where 1:50 maximum slope is shown, 1:64 is preferred.

See Standard 606001 for details of depressed curb adjacent to curb ramp.

All dimensions are in inches (millimeters) unless otherwise shown.

| DATE | REVISIONS |
|---|---|
| 1-1-15 | Added note ②. |
| | |
| | |
| 1-1-14 | Revised sidewalk width. |
| | Revised gen. notes to limit |
| | curb rad. to 6' (1.83 m) min. |

# DEPRESSED CORNER FOR SIDEWALKS

**STANDARD 424021–03**

Illinois Department of Transportation

PASSED January 1, 2015
ENGINEER OF POLICY AND PROCEDURES
APPROVED January 1, 2015
ENGINEER OF DESIGN AND ENVIRONMENT

ISSUED 1-1-12

② Detectable warning shall only be installed at entrances/alleys with permanent traffic control devices (i.e. stop signs, signals).

③ Where possible, maintain the grade of the sidewalk across the entrance/alley to avoid the need for ramps and upper landings.

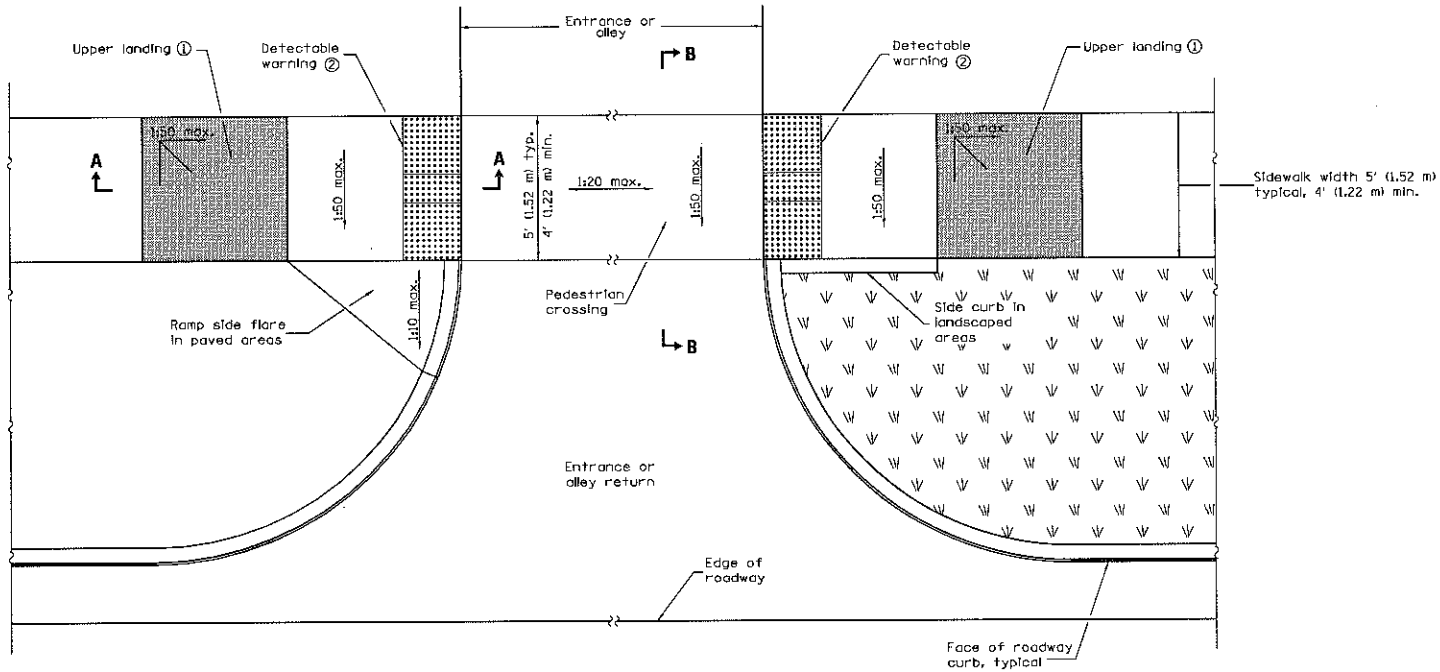


## ENTRANCE /ALLEY PEDESTRIAN CROSSING

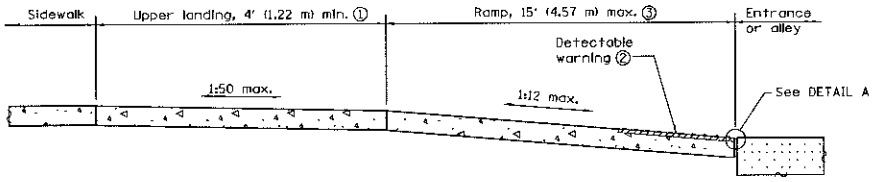


## SECTION A–A

① Upper landing not required for ramp slopes flatter than 1:20.

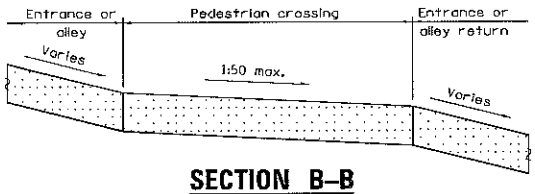


## SECTION B–B

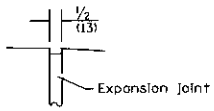


## DETAIL A

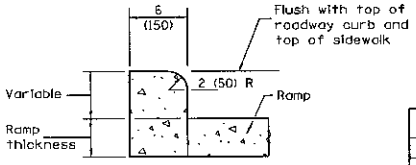


## SIDE CURB DETAIL

### GENERAL NOTES

All slope ratios are expressed as units of vertical displacement to units of horizontal displacement (V:H).

Where 1:50 maximum slope is shown, 1:64 is preferred.

All dimensions are in inches (millimeters) unless otherwise shown.

| DATE | REVISIONS |
|---|---|
| 1-1-13 | Revised General Notes. |
| | |
| | |
| 1-1-12 | New standard. |
| | |
| | |

# ENTRANCE / ALLEY PEDESTRIAN CROSSINGS

STANDARD 424026-01

Illinois Department of Transportation

PASSED January 1, 2013
Michael Brand
ENGINEER OF POLICY AND PROCEDURES

APPROVED January 1, 2013
ENGINEER OF DESIGN AND ENVIRONMENT

ISSUED 1-1-12

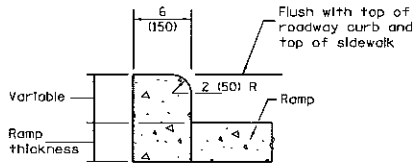


## SIDE CURB DETAIL

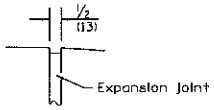


## DETAIL A

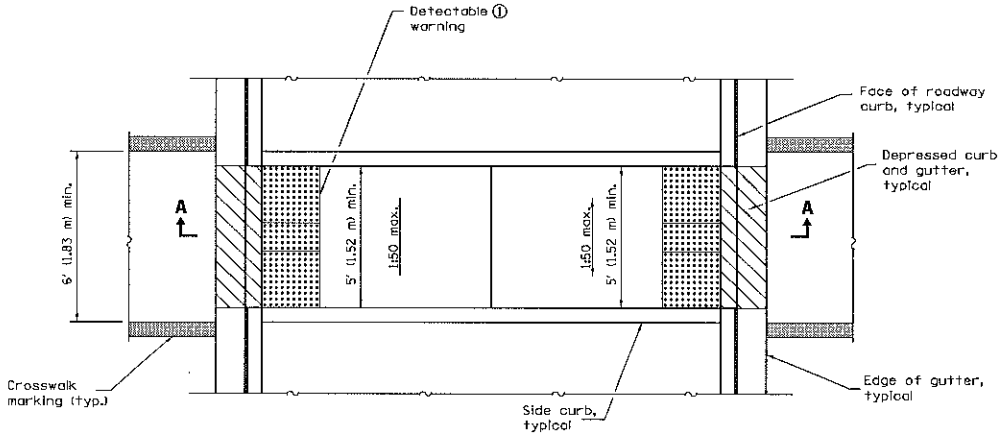


## MEDIAN PEDESTRIAN CROSSING

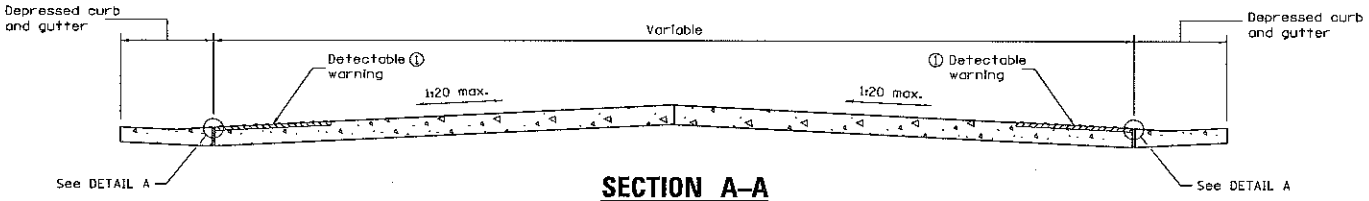


## SECTION A–A

ⓘ Omit detectable warnings when distance between back of curbs is less than 6' (1.83 m).

### GENERAL NOTES

All slope ratios are expressed as units of vertical displacement to units of horizontal displacement (V:H).

Where 1:50 maximum slope is shown, 1:64 is preferred.

See Standard 606001 for details of depressed curb adjacent to curb ramp.

All dimensions are in inches (millimeters) unless otherwise shown.

Illinois Department of Transportation

PASSED January 1, 2013
ENGINEER OF POLICY AND PROCEDURES
APPROVED January 1, 2013
ENGINEER OF DESIGN AND ENVIRONMENT

ISSUED 1-1-12

| DATE | REVISIONS |
|---|---|
| 1-1-12 | Widened crosswalk to 6' |
| | (1.83 m) min. inside dimension. |
| | Revised General Notes. |
| 1-1-12 | New standard. |

**MEDIAN PEDESTRIAN CROSSINGS**

**STANDARD 424031-01**

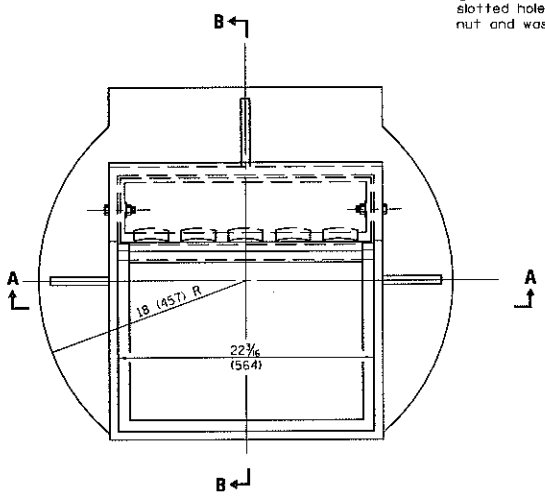


CAST FRAME

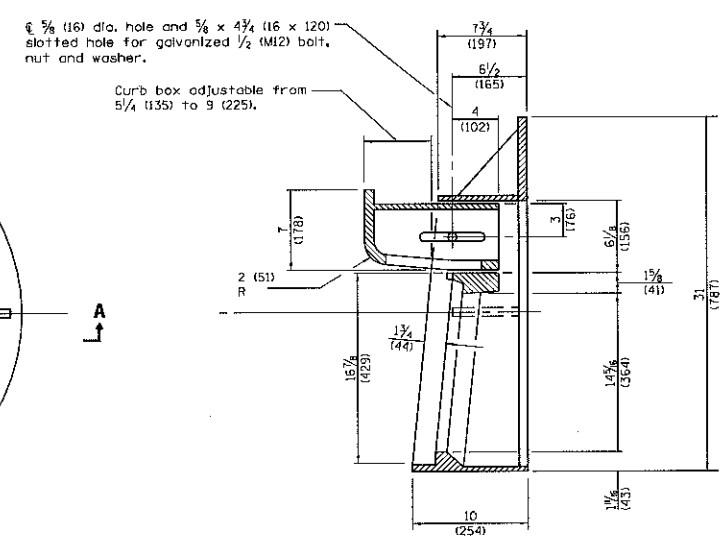


SECTION B–B

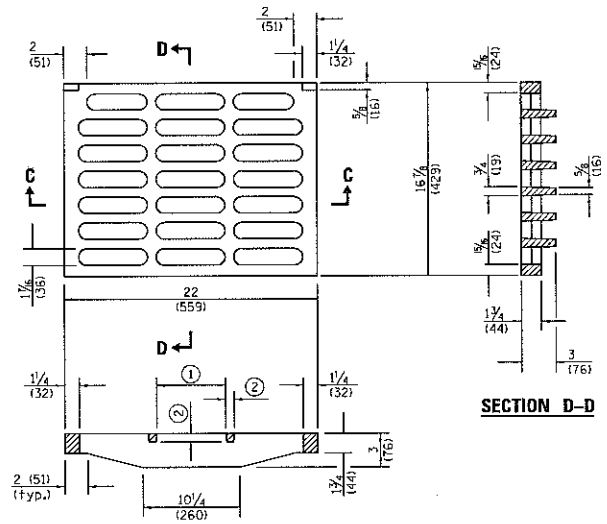


SECTION D–D

SECTION C–C

(1) = 6 (152) typ.

(2) = 3/4 (19) typ.

CAST GRATE

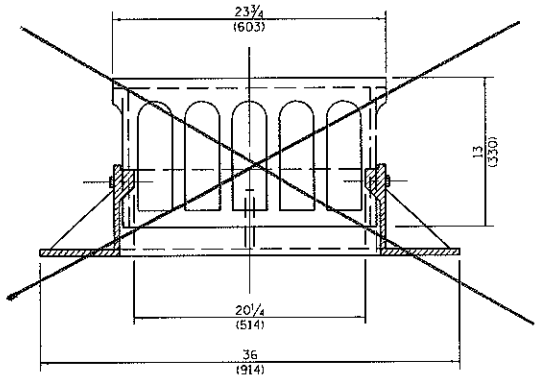


SECTION A–A

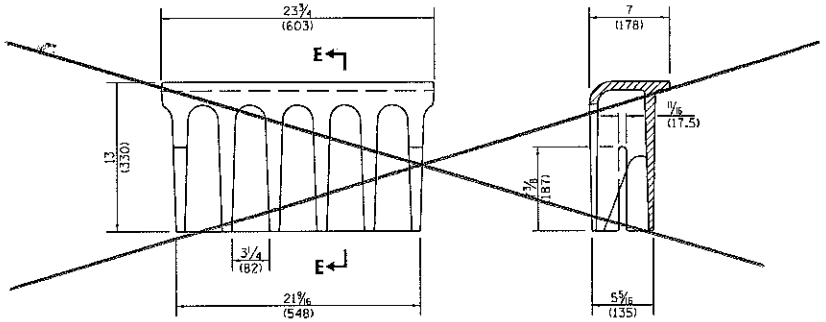


ALTERNATE CURB BOX




SECTION E–E

All dimensions are in inches (millimeters) unless otherwise shown.

Illinois Department of Transportation

PASSED January 1, 2015

ENGINEER OF POLICY AND PROCEDURES

APPROVED January 1, 2015

ENGINEER OF DESIGN AND ENVIRONMENT

ISSUED 1-1-97

| DATE | REVISIONS |
|---|---|
| 1-1-15 | Revised dimenstions of |
| | frame and alternate curb |
| | box. |
| 1-1-09 | Switched units to |
| | English (metric). |

# FRAME AND GRATE TYPE 3

STANDARD 604006–05

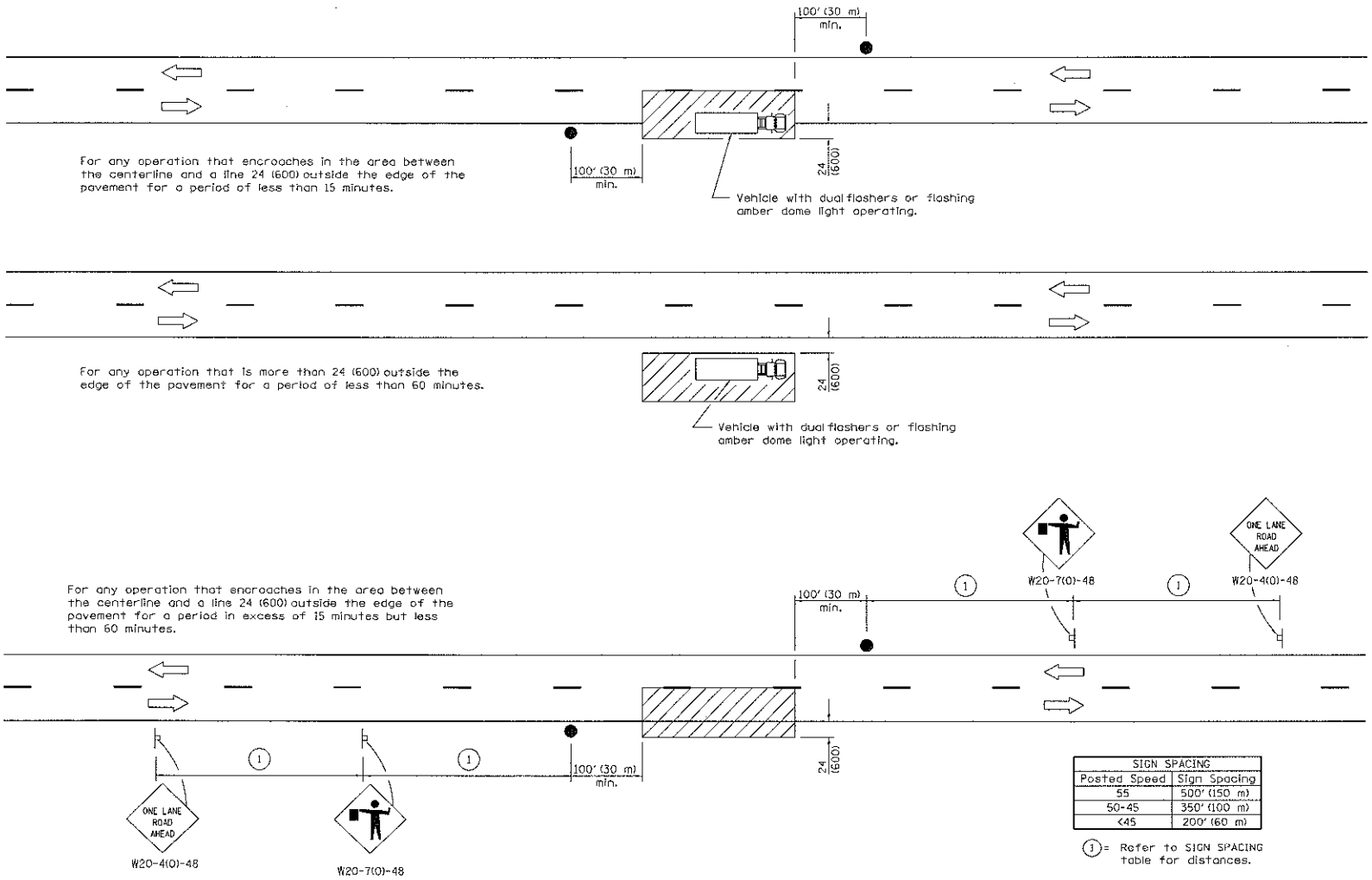


| SIGN SPACING | |
|---|---|
| Posted Speed | Sign Spacing |
| 55 | 500' (150 m) |
| 50-45 | 350' (100 m) |
| <45 | 200' (60 m) |

(1) = Refer to SIGN SPACING table for distances.

All dimensions are in inches (millimeters) unless otherwise shown.

## TYPICAL APPLICATIONS

Marking patches
Field survey
String line
Utility operations
Cleaning up debris on pavement

## SYMBOLS

Work area
Sign on portable or permanent support
Flagger with traffic control sign

| DATE | REVISIONS |
|---|---|
| 1-1-11 | Revised flagger sign. |
| | |
| | |
| 1-1-09 | Switched units to English (metric). |
| | |

# LANE CLOSURE, 2L, 2W, SHORT TIME OPERATIONS

**STANDARD 701301-04**

Illinois Department of Transportation

APPROVED January 1, 2011
ENGINEER OF SAFETY ENGINEERING

APPROVED January 1, 2011
ENGINEER OF DESIGN AND ENVIRONMENT

ISSUED 1-1-97

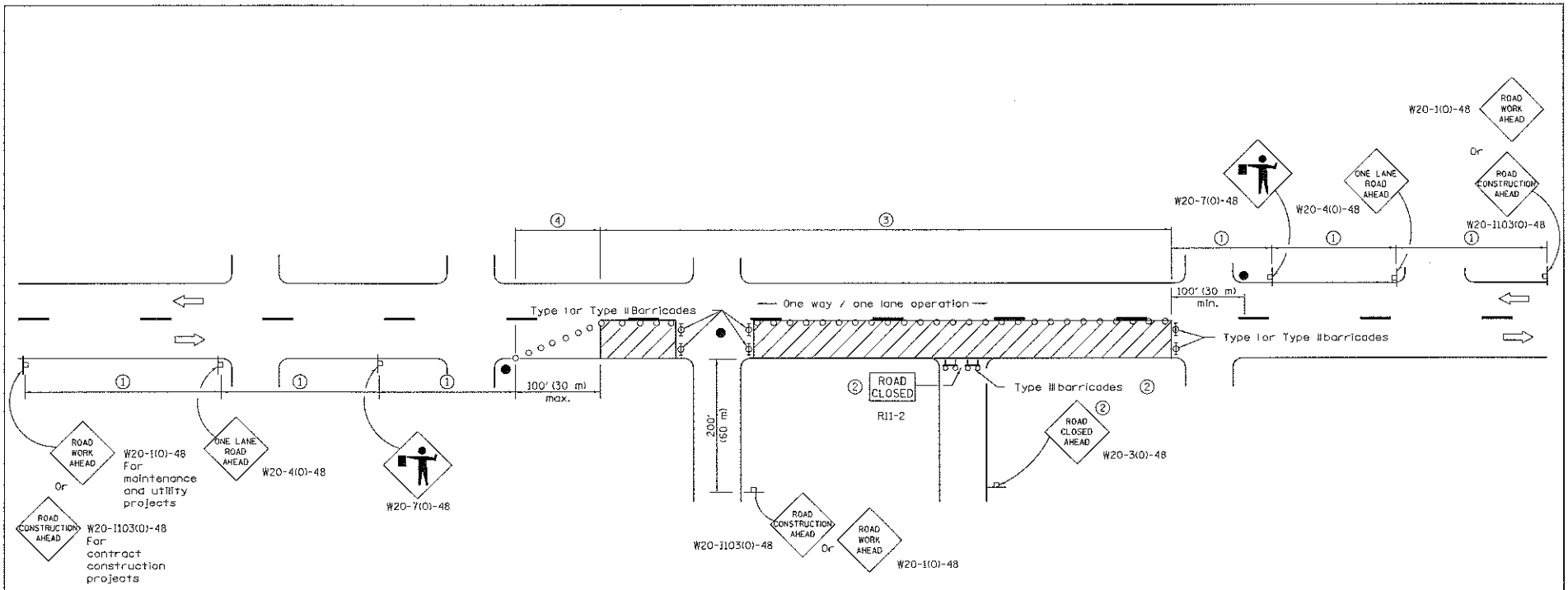


| SIGN SPACING | |
|---|---|
| Posted Speed | Sign Spacing |
| 55 | 500' (150 m) |
| 50-45 | 350' (100 m) |
| <45 | 200' (60 m) |

## SYMBOLS

- Work area
- Cone, drum or barricade (not required for moving operations)
- Sign on portable or permanent support
- Flagger with traffic control sign
- Barricade or drum with flashing light
- Type III barricade with flashing lights

1. Refer to SIGN SPACING TABLE for distances.
2. For approved sideroad closures.
3. Cones at 25' (8 m) centers for 250' (75 m). Additional cones may be placed at 50' (15 m) centers. When drums or Type I or Type II barricades are used, the interval between devices may be doubled.
4. Cones, drums or barricades at 20' (6 m) centers.

## GENERAL NOTES

This Standard is used where at any time, day or night, any vehicle, equipment, workers or their activities encroach on the pavement requiring the closure of one traffic lane in an urban area.

All dimensions are in inches (millimeters) unless otherwise shown.

Illinois Department of Transportation

APPROVED January 1, 2011
ENGINEER OF SAFETY ENGINEERING

APPROVED January 1, 2011
ENGINEER OF DESIGN AND ENVIRONMENT

ISSUED 1-1-91

| DATE | REVISIONS |
|---|---|
| 1-1-11 | Revised flagger sign. |
| | |
| | |
| 1-1-09 | Switched units to |
| | English (metric). |
| | Corrected sign No.'s. |

# URBAN LANE CLOSURE, 2L, 2W, UNDIVIDED

STANDARD 701501-06

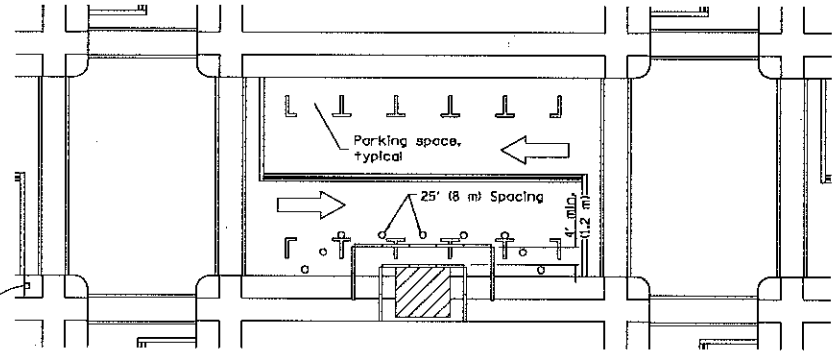


① Omit whenever duplicated by road work traffic control.

① ROAD CONSTRUCTION AHEAD — W20-1103(0)-48 for contract construction projects

Or

① ROAD WORK AHEAD — W20-1(0)-48 for maintenance and utility projects

## SIDEWALK DIVERSION

## SYMBOLS

- Work area
- Sign on portable or permanent support
- Barricade or drum
- Cone, drum or barricade
- Type III barricade
- Detectable pedestrian channelizing barricade

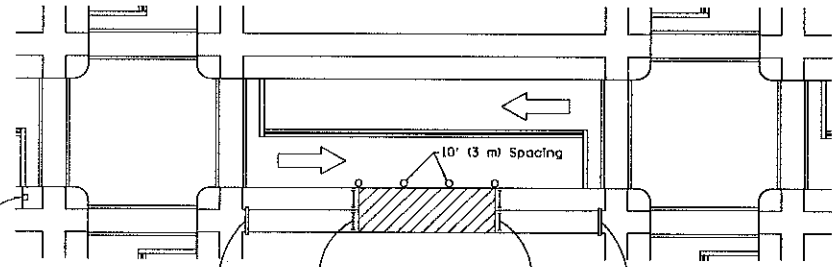


① ROAD CONSTRUCTION AHEAD — W20-1103(0)-48 for contract construction projects

Or

① ROAD WORK AHEAD — W20-1(0)-48 for maintenance and utility projects

SIDEWALK CLOSED — R11-1101-2418

SIDEWALK CLOSED / USE OTHER SIDE — R11-1102-2430

SIDEWALK CLOSED / USE OTHER SIDE — R11-1102-2430

## SIDEWALK CLOSURE

## GENERAL NOTES

This Standard is used where, at any time, pedestrian traffic must be rerouted due to work being performed.

This Standard must be used in conjunction with other Traffic Control & Protection Standards when roadway traffic is affected.

Temporary facilities shall be detectable and accessible.

The temporary pedestrian facilities shall be provided on the same side of the closed facilities whenever possible.

The SIDEWALK CLOSED / USE OTHER SIDE sign shall be placed at the nearest crosswalk or intersection to each end of the closure. Where the closure occurs at a corner, the signs shall be erected on the corners across the street from the closure. The SIDEWALK CLOSED signs shall be used at the ends of the actual closures.

Type III barricades and R11-2-4830 signs shall be positioned as shown in "ROAD CLOSED TO ALL TRAFFIC" detail on Standard 701901.

All dimensions are in inches (millimeters) unless otherwise shown.

Illinois Department of Transportation

APPROVED April 1, 2016
ENGINEER OF SAFETY ENGINEERING

APPROVED April 1, 2016
ENGINEER OF DESIGN AND ENVIRONMENT

ISSUED 1-1-07

| DATE | REVISIONS |
|---|---|
| 4-1-16 | Omitted orange safety fence |
| | from standard as this is |
| | covered in the std. spec. |
| 1-1-12 | Added SIDEWALK DIVERSION. |
| | Modified appearance of |
| | plan views. Renamed Std. |

# SIDEWALK, CORNER OR CROSSWALK CLOSURE

(Sheet 1 of 2)

STANDARD 701801-06

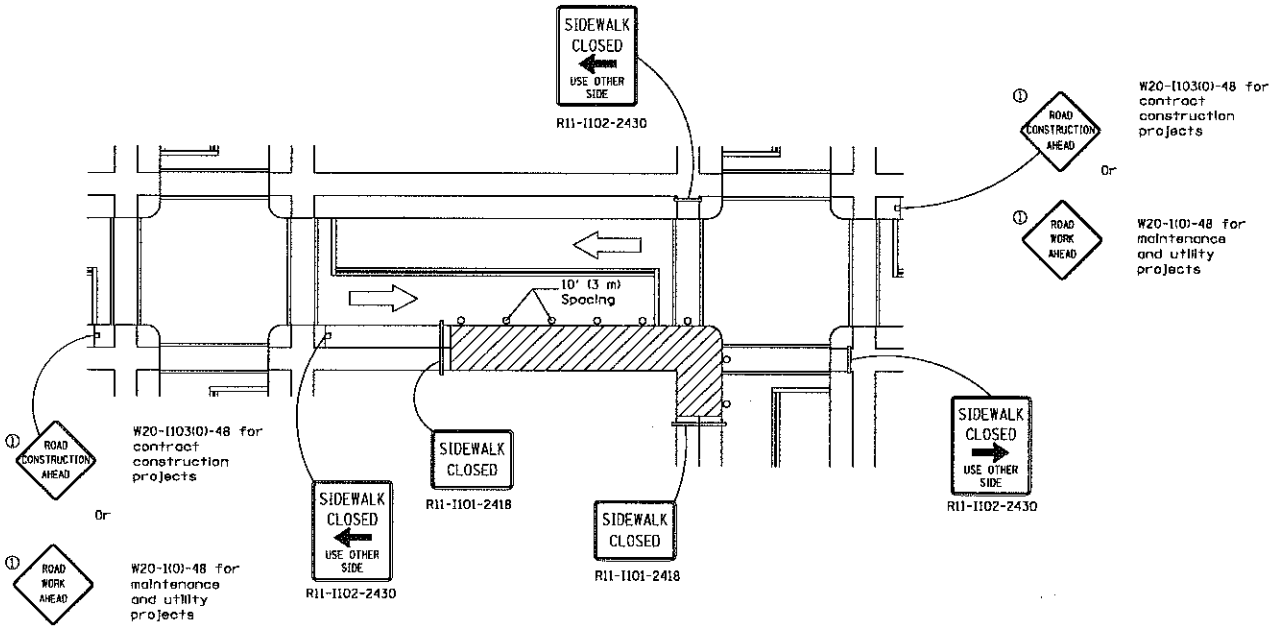


**CORNER CLOSURE**

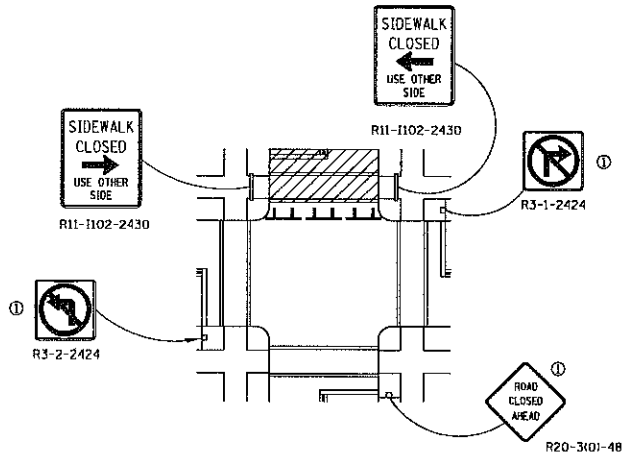


**CROSSWALK CLOSURE**

Illinois Department of Transportation

APPROVED April 1, 2016
ENGINEER OF SAFETY ENGINEERING

APPROVED April 1, 2016
ENGINEER OF DESIGN AND ENVIRONMENT

ISSUED 1-1-97

# SIDEWALK, CORNER OR CROSSWALK CLOSURE

(Sheet 2 of 2)

STANDARD 701801-06

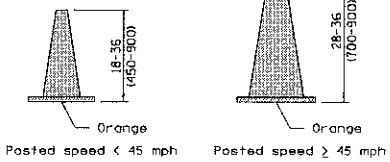


**CONE FOR DAYTIME**

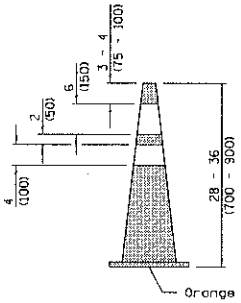


**REFLECTORIZED CONE FOR NIGHTTIME**

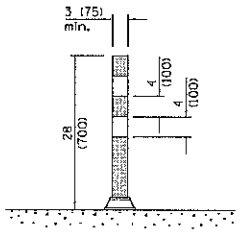


**TUBULAR MARKER**

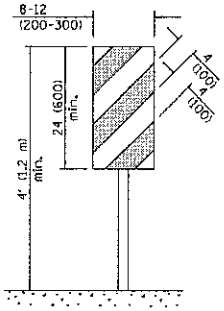


**VERTICAL PANEL**
POST MOUNTED

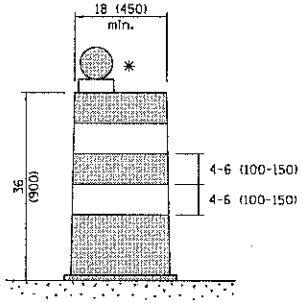


**DRUM**

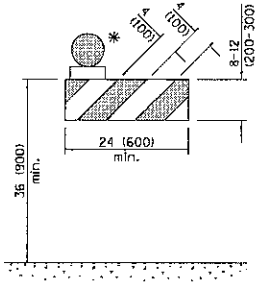


**TYPE I BARRICADE**

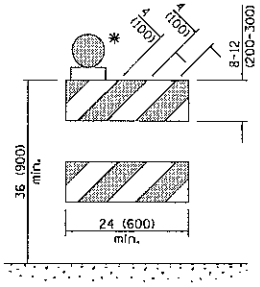


**TYPE II BARRICADE**

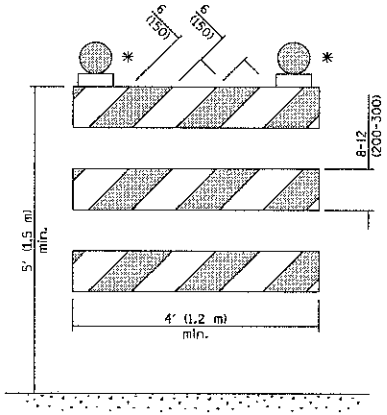


**TYPE III BARRICADE**

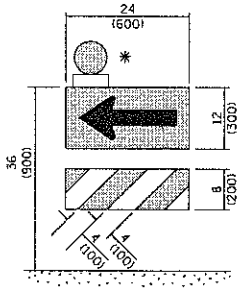


**DIRECTION INDICATOR BARRICADE**

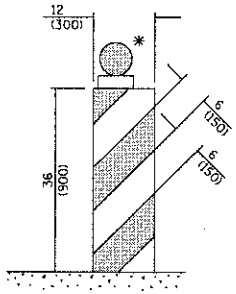


**VERTICAL BARRICADE**

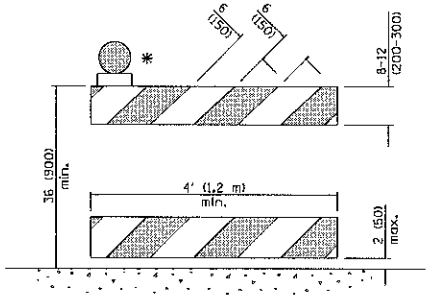


**DETECTABLE PEDESTRIAN CHANNELIZING BARRICADE**

✱ Warning lights (if required)

## GENERAL NOTES

All heights shown shall be measured above the pavement surface.

All dimensions are in inches (millimeters) unless otherwise shown.

| DATE | REVISIONS |
|---|---|
| 1-1-17 | Changed FLEXIBLE DELINEATOR to TUBULAR MARKER. |
| | |
| | |
| 4-1-16 | Add dim's to barricades. Rev. note for post mnt. signs. Rev. cone dtls. Add W12-I103. |

# TRAFFIC CONTROL DEVICES

(Sheet 1 of 3)

**STANDARD 701901-06**

Illinois Department of Transportation

APPROVED January 1, 2017
ENGINEER OF OPERATIONS

APPROVED January 1, 2017
ENGINEER OF DESIGN AND ENVIRONMENT

ISSUED 1-1-97

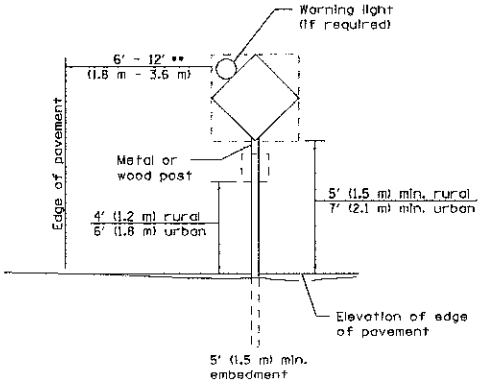


## POST MOUNTED SIGNS

** When curb or paved shoulder are present this dimension shall be 24 (600) to the face of curb or 6' (1.8 m) to the outside edge of the paved shoulder.

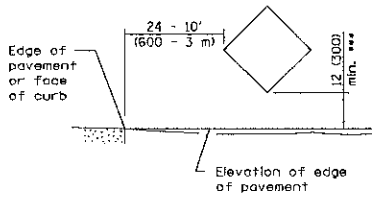


## SIGNS ON TEMPORARY SUPPORTS

*** When work operations exceed four days, this dimension shall be 5' (1.5 m) min. If located behind other devices, the height shall be sufficient to be seen completely above the devices.

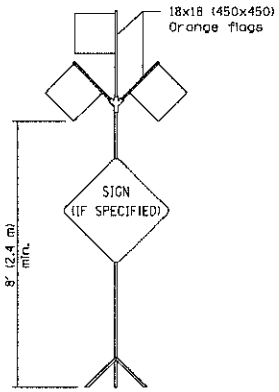


## HIGH LEVEL WARNING DEVICE

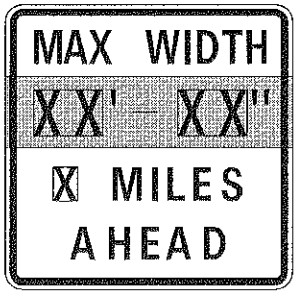


W12-I103-4848

## WIDTH RESTRICTION SIGN

XX'-XX" width and X miles are variable.

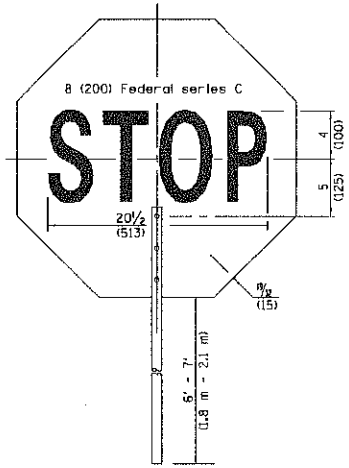


FRONT SIDE

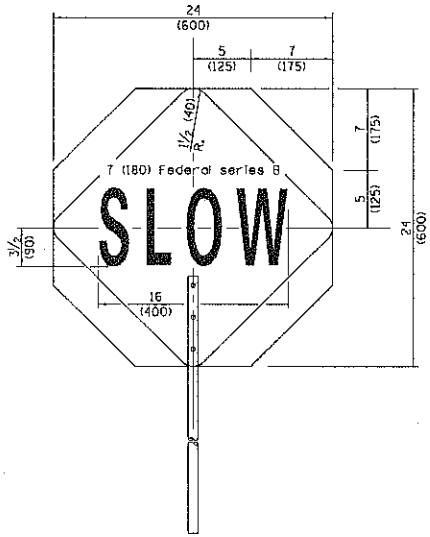


REVERSE SIDE

## FLAGGER TRAFFIC CONTROL SIGN

| ROAD CONSTRUCTION NEXT X MILES | END CONSTRUCTION |
|---|---|
| G20-I104(0)-6036 | G20-I105(0)-6024 |

This signing is required for all projects 2 miles (3200 m) or more in length.

ROAD CONSTRUCTION NEXT X MILES sign shall be placed 500' (150 m) in advance of project limits.

END CONSTRUCTION sign shall be erected at the end of the job unless another job is within 2 miles (3200 m).

Dual sign displays shall be utilized on multi-lane highways.

## WORK LIMIT SIGNING

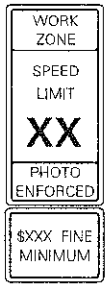


W21-I115(0)-3618

R2-1-3648

R10-I108p-3618 ****

R2-I106p-3618

Sign assembly as shown on Standards or as allowed by District Operations.

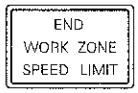


G20-I103(0)-6036

This sign shall be used when the above sign assembly is used.

## HIGHWAY CONSTRUCTION SPEED ZONE SIGNS

**** R10-I108p shall only be used along roadways under the jurisdiction of the State.

Illinois Department of Transportation

APPROVED January 1, 2017
ENGINEER OF OPERATIONS

APPROVED January 1, 2017
ENGINEER OF DESIGN AND ENVIRONMENT

ISSUED 1-1-97

# TRAFFIC CONTROL DEVICES

(Sheet 2 of 3)

STANDARD 701901-06

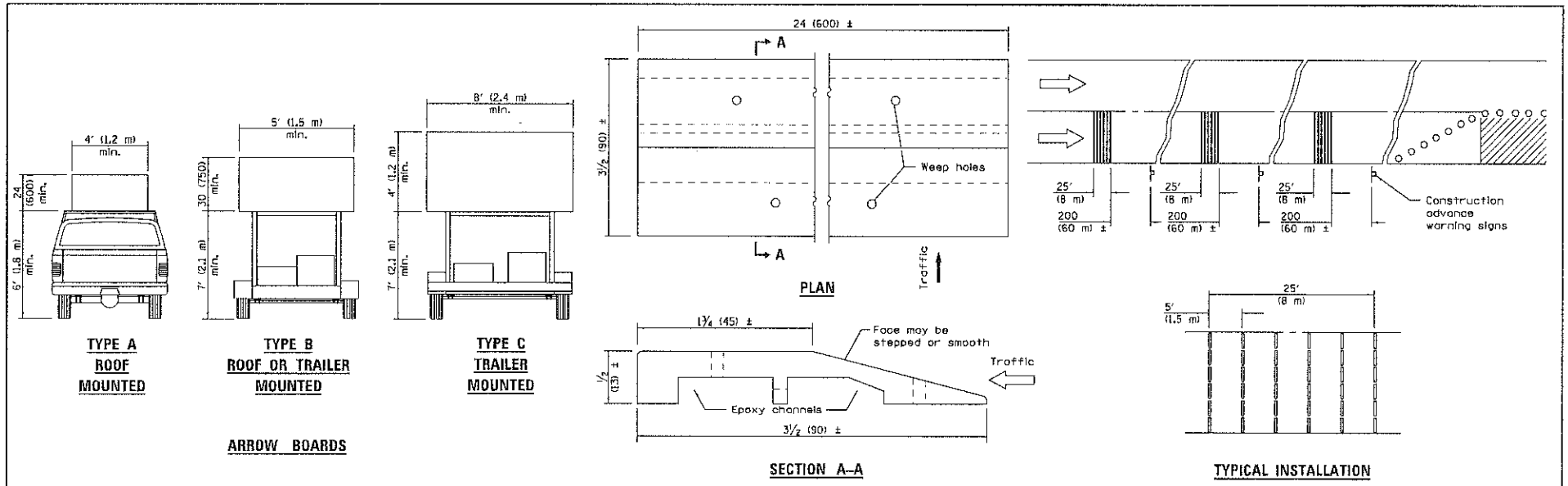


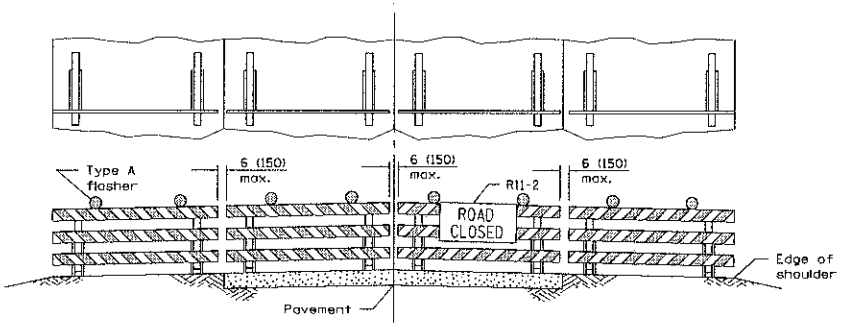


ROAD CLOSED TO ALL TRAFFIC

Reflectorized striping may be omitted on the back side of the barricades. If a Type III barricade with an attached sign panel which meets NCHRP 350 is not available, the sign may be mounted on an NCHRP 350 temporary sign support directly in front of the barricade.

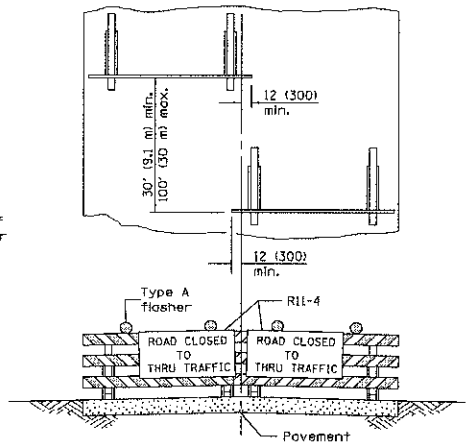


ROAD CLOSED TO THRU TRAFFIC

Reflectorized striping shall appear on both sides of the barricades. If a Type III barricade with an attached sign panel which meets NCHRP 350 is not available, the signs may be mounted on NCHRP 350 temporary sign supports directly in front of the barricade.

## TYPICAL APPLICATIONS OF TYPE III BARRICADES CLOSING A ROAD

Illinois Department of Transportation

APPROVED January 1, 2017
ENGINEER OF OPERATIONS

APPROVED January 1, 2017
ENGINEER OF DESIGN AND ENVIRONMENT

ISSUED 1-1-97

# TRAFFIC CONTROL DEVICES

(Sheet 3 of 3)

STANDARD 701901-06

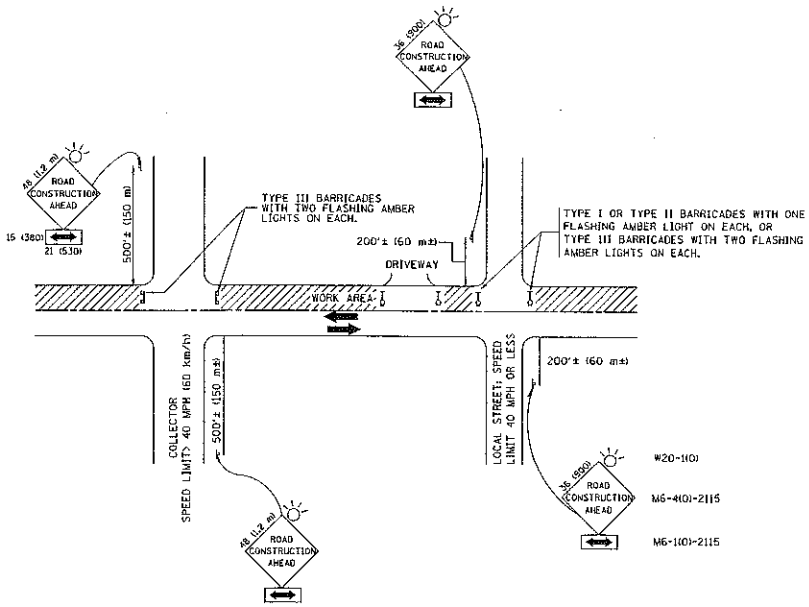


## TRAFFIC CONTROL AND PROTECTION FOR SIDE ROADS, INTERSECTIONS, AND DRIVEWAYS

### NOTES:

A. FOR NO LANE RESTRICTION ON THE SIDE ROAD OR DRIVEWAYS

1. SIDE ROAD WITH A SPEED LIMIT OF 40 MPH (60 km/h) OR LESS AS SHOWN ON THE DRAWING AND AS DIRECTED BY THE ENGINEER:

   a) ONE **ROAD CONSTRUCTION AHEAD** SIGN 36 x 36 (900x900) WITH A FLASHER AND FLAG MOUNTED ON IT APPROXIMATELY 200' (60 m) IN ADVANCE OF THE MAIN ROUTE.

   b) THE CLOSED PORTION OF THE MAIN ROUTE SHALL BE PROTECTED BY BLOCKING WITH TYPE I, TYPE II OR TYPE III BARRICADES, 1/3 OF THE CROSS SECTION OF THE CLOSED PORTION.

2. SIDE ROAD WITH A SPEED LIMIT GREATER THAN 40 MPH (60 km/h) AS SHOWN ON THE DRAWING AND AS DIRECTED BY THE ENGINEER:

   a) ONE **ROAD CONSTRUCTION AHEAD** SIGN 48 x 48 (1.2 m x 1.2 m) WITH A FLASHER MOUNTED ON IT APPROXIMATELY 500' (150 m) IN ADVANCE OF THE MAIN ROUTE.

   b) THE CLOSED PORTION OF THE MAIN ROUTE SHALL BE PROTECTED BY BLOCKING WITH TYPE III BARRICADES, 1/2 OF THE CROSS SECTION OF THE CLOSED PORTION.

3. WHEN THE SIDE ROAD LIES BETWEEN THE BEGINNING OF THE MAINLINE SIGNING AND THE WORK ZONE, A SINGLE HEADED ARROW (M6-1) SHALL BE USED IN LIEU OF THE DOUBLE HEADED ARROW (M6-4).

B. FOR A LANE CLOSURE ON A SIDE ROAD OR DRIVEWAY:

USE APPLICABLE PORTIONS OF THE TYPICAL APPLICATION OF TRAFFIC CONTROL DEVICES (STD. 701501, STD. 701606 OR THE APPROPRIATE STANDARD). THE SPACING OF SIGNS AND BARRICADES SHALL BE ADJUSTED FOR FIELD CONDITIONS AS DIRECTED BY THE ENGINEER. THE DIRECTIONAL ARROW SHALL BE COVERED OR REMOVED WHEN NO LONGER CONSISTENT WITH THE SIDE ROAD LANE CLOSURE.

C. ADVANCE WARNING SIGNS ARE TO BE OMITTED ON DRIVEWAY UNLESS OTHERWISE NOTED.

D. THE TRAFFIC CONTROL AND PROTECTION FOR SIDE ROADS, INTERSECTIONS, AND DRIVEWAYS SHALL BE INCIDENTAL TO THE COST OF SPECIFIED TRAFFIC CONTROL STANDARDS OR ITEMS.

All dimensions are in millimeters (inches) unless otherwise shown.

| | | | | |
|---|---|---|---|---|
| FILE NAME = V:\dist\std\22x34\tc10.dgn | USER NAME = gaglianobt | DESIGNED - LHA | REVISED - J. OBERLE 10-18-95 | STATE OF ILLINOIS DEPARTMENT OF TRANSPORTATION |
| | | DRAWN - | REVISED - A. HOUSEH 03-06-96 | |
| | PLOT SCALE = 50.000 ' / IN. | CHECKED - | REVISED - A. HOUSEH 10-15-96 | |
| | PLOT DATE = 1/4/2000 | DATE - 06-89 | REVISED - T. RAMMACHER 01-06-00 | |

TRAFFIC CONTROL AND PROTECTION FOR SIDE ROADS, INTERSECTIONS, AND DRIVEWAYS

SCALE: NONE | SHEET NO. 1 OF 1 SHEETS | STA. | TO STA.

| F.A. RTE. | SECTION | COUNTY | TOTAL SHEETS | SHEET NO. |
|---|---|---|---|---|
| | | | | |
| | TC-10 | CONTRACT NO. | | |
| FED. ROAD DIST. NO. 1 | ILLINOIS | FED. AID PROJECT | | |

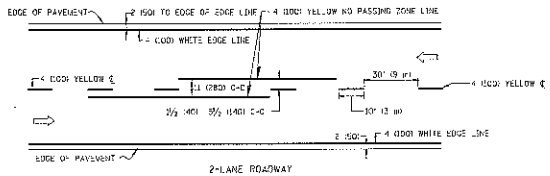


2-LANE ROADWAY

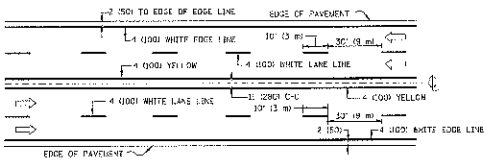


MULTI-LANE UNDIVIDED

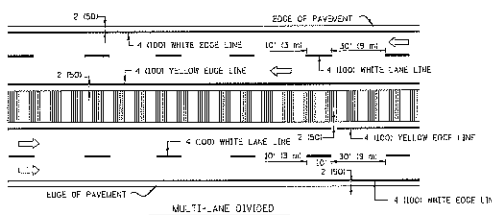


MULTI-LANE DIVIDED
WITH MOUNTABLE MEDIAN

NOTE: MEDIANS WITH BARRIER CURB DO NOT REQUIRE AN EDGE LINE

## TYPICAL LANE AND EDGE LINE MARKING

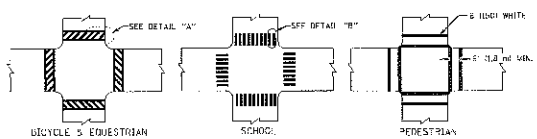


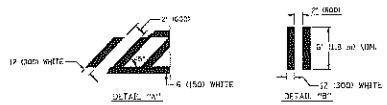


## TYPICAL CROSSWALK MARKING

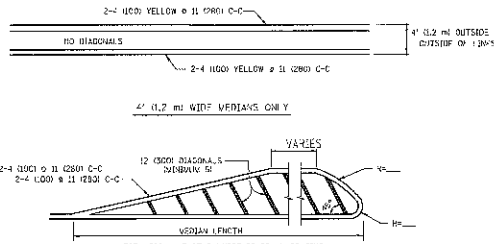


4' (1.2 m) WIDE MEDIANS ONLY




FOR MEDIAN LENGTHS WHERE DIAGONAL SPACING CANNOT BE ATTAINED, USE 5 (FIVE) EQUALLY SPACED DIAGONAL LINES.

DIAGONAL LINE SPACING: 50' (15 m) C-C (LESS THAN 50MPH (80 km/h))
75' (25 m) C-C (50MPH (80 km/h) TO 45MPH (70 km/h))
150' (45 m) C-C (MORE THAN 45MPH (70 km/h))

MEDIANS OVER 4' (1.2 m) WIDE

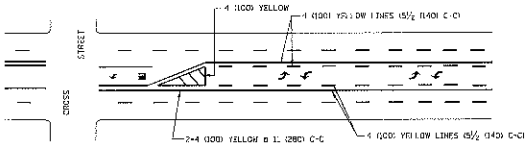


A WINDOW OF TWO PAIRS OF TURN ARROWS SHALL BE USED, WHITE IN COLOR. ADDITIONAL PAIRS SHALL BE PLACED AT 200' (60 m) TO 300' (90 m) INTERVALS.

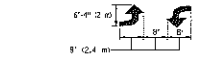


MEDIAN WITH TWO-WAY LEFT TURN LANE

## TYPICAL PAINTED MEDIAN MARKING

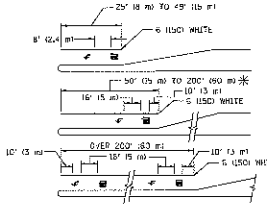


FOR STOP LETTERS 8' (2.4 m) AND ARROWS SHALL BE USED.
AREA = 15.6 SQ. FT. (1.5 m²) ; AREA = 20.8 SQ. FT. (1.9 m²)

* TURN LANES IN EXCESS OF 400' (120 m) IN LENGTH MAY HAVE AN ADDITIONAL SET OF ARROW - "ONLY" INSTALLED HIDWAY BETWEEN THE OTHER TWO SETS OF ARROW - "ONLY".

TYPICAL LEFT (OR RIGHT) TURN LANE

## TYPICAL TURN LANE MARKING

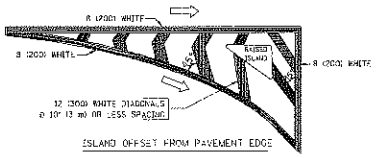


ISLAND OFFSET FROM PAVEMENT EDGE

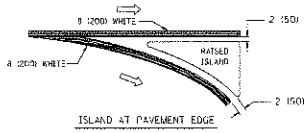


ISLAND AT PAVEMENT EDGE

## TYPICAL ISLAND MARKING

| TYPE OF MARKING | WIDTH OF LINE | PATTERN | COLOR | SPACING / REMARKS |
|---|---|---|---|---|
| CENTERLINE ON 2 LANE PAVEMENT | 4 (100) | SKIP-DASH | YELLOW | 10' (3 m) LINE WITH 30' (9 m) SPACE |
| CENTERLINE ON MULTI-LANE UNDIVIDED PAVEMENT | 2 @ 4 (100) | SOLID | YELLOW | 11 (280) C-C |
| NO PASSING ZONE LINES:<br>FOR ONE DIRECTION<br>FOR BOTH DIRECTIONS | 4 (100)<br>2 @ 4 (100) | SOLID<br>SOLID | YELLOW<br>YELLOW | 5½ (140) C-C FROM SKIP-DASH CENTERLINE<br>11 (280) C-C<br>SKIP-DASH CENTERLINE BETWEEN |
| LANE LINES | 4 (100)<br>4 (100) ON FREEWAYS | SKIP-DASH<br>SKIP-DASH | WHITE<br>WHITE | 10' (3 m) LINE WITH 30' (9 m) SPACE |
| DOTTED LINES<br>(EXTENSIONS OF CENTER, LANE OR TURN LANE MARKINGS) | SAME AS LINE BEING EXTENDED | SKIP-DASH | SAME AS LINE BEING EXTENDED | 2' (600) LINE WITH 6' (1.8 m) SPACE |
| EDGE LINES | 4 (100) | SOLID | YELLOW-LEFT<br>WHITE-RIGHT | OUTLINE MOUNTABLE MEDIANS IN YELLOW; EDGE LINES ARE NOT USED NEXT TO BARRIER CURB |
| TURN LANE MARKINGS | 6 (150) LINE; FULL SIZE LETTERS & SYMBOLS (8' (2.4m)) | SOLID | WHITE | SEE TYPICAL TURN LANE MARKING DETAIL |
| TWO WAY LEFT TURN MARKING | 2 @ 4 (100)<br>DASH DIRECTION<br>8' (2.4m) LEFT ARROW | SKIP-DASH<br>AND SOLID<br>IN PAIRS | YELLOW<br>WHITE | 10' (3 m) LINE WITH 30' (9 m) SPACE FOR SKIP-DASH; 5½ (140) C-C BETWEEN SOLID LINE AND SKIP-DASH LINE<br>SEE TYPICAL TWO-WAY LEFT TURN MARKING DETAIL |
| CROSSWALK LINES (PEDESTRIAN)<br>A. DIAGONALS (BOLD & EQUESTRIAN)<br>B. LONGITUDINAL BARS (SCHOOL) | 2 @ 6 (150)<br>12 (300) @ 45°<br>12 (300) @ 90° | SOLID<br>SOLID<br>SOLID | WHITE<br>WHITE<br>WHITE | NOT LESS THAN 6' (1.8 m) APART<br>2' (600) APART<br>2' (600) APART<br>SEE TYPICAL CROSSWALK MARKING DETAILS. |
| STOP LINES | 24 (600) | SOLID | WHITE | PLACE 4' (1.2 m) IN ADVANCE OF AND PARALLEL TO CROSSWALK, IF PRESENT. OTHERWISE, PLACE AT DESIRED STOPPING POINT, PARALLEL TO CROSSROAD CENTERLINE, WHEN POSSIBLE. |
| PAINTED MEDIANS | 2 @ 4 (100) WITH<br>12 (300) DIAGONALS<br>@ 45°<br>NO DIAGONALS USED FOR 4' (1.2 m) WIDE MEDIANS | SOLID | YELLOW:<br>TWO WAY TRAFFIC<br>WHITE:<br>ONE WAY TRAFFIC | 11 (280) C-C FOR THE DOUBLE LINE<br>SEE TYPICAL PAINTED MEDIAN MARKING. |
| GORE MARKING AND CHANNELIZING LINES | 8 (200) WITH 12 (300) DIAGONALS @ 45° | SOLID | WHITE | DIAGONALS:<br>15' (4.5 m) C-C (LESS THAN 30MPH (50 km/h))<br>20' (6 m) C-C (30MPH (50 km/h) TO 45MPH (70 km/h))<br>30' (9 m) C-C (OVER 45MPH (70 km/h)) |
| RAILROAD CROSSING | 24 (600) TRANSVERSE LINES; "RR" (5' (1.5 m) LETTERS; 15 (400) LINE FOR "X" | SOLID | WHITE | SEE STATE STANDARD 780001<br>AREA OF:<br>"X" = 4.5 SQ. FT. (0.13 m²) EACH<br>"RR" = 5.0 SQ. FT. (0.5 m²) |
| SHOULDER DIAGONALS | 12 (300) @ 45° | SOLID | WHITE - RIGHT<br>YELLOW - LEFT | 30' (9 m) C-C (LESS THAN 30MPH (50 km/h))<br>75' (25 m) C-C (30 MPH (50 km/h) TO 45MPH (70 km/h))<br>150' (45 m) C-C (OVER 45MPH (70 km/h)) |

FOR FURTHER DETAILS ON PAVEMENT MARKING REFER TO STANDARD SPECIFICATIONS FOR ROAD AND BRIDGE CONSTRUCTION AND STATE STANDARD 780001.

All dimensions are in inches (millimeters) unless otherwise shown.

| | | | | | | | | | |
|---|---|---|---|---|---|---|---|---|---|
| FILE NAME = u:\pw_work\pwcost\drivekasgn\d0780015\sd3.dgn | USER NAME = drivekasgn | DESIGNED - EVERS | REVISED - T. HAMMACHER 10-27-94 | STATE OF ILLINOIS DEPARTMENT OF TRANSPORTATION | DISTRICT ONE TYPICAL PAVEMENT MARKINGS | F.A. RTE. | SECTION | COUNTY | TOTAL SHEETS / SHEET NO. |
| | PLOT SCALE = 50.000 ' / IN. | DRAWN - | REVISED - C. JUCIUS 09-09-09 | | | | TC-13 | CONTRACT NO. | |
| | PLOT DATE = 9/9/2009 | CHECKED - | REVISED - | | | | | | |
| | | DATE - 03-19-93 | REVISED - | | SCALE: NONE / SHEET NO. 1 OF 1 SHEETS / STA. TO STA. | | FED. ROAD DIST. NO. 1 / ILLINOIS | FED. AID PROJECT | |

2017 RESURFACING (B)
SCHEDULE OF QUANTITIES

| STREET | FROM | TO | LENGTH (FT) | WIDTH (FT) | TOT. IMP. AREA (SY) | HMA SURF. CSE. MIX D (TON) | MIN. THICKNESS (IN) | LEVEL BIND (TON) | AVG. THICKNESS (IN) |
|---|---|---|---|---|---|---|---|---|---|
| 67TH ST | DUNHAM RD | SARATOGA AVE | 1277 | 34.5 | 4969 | 487 | 1.75 | 209 | 0.75 |
| 68TH ST | DUNHAM RD | SARATOGA AVE | 1278 | 28.5 | 4158 | 349 | 1.50 | 175 | 0.75 |
| 71ST TERRACE | CUL DE SAC | 71ST ST | 260 | 27.5 | 1265 | 106 | 1.50 | | |
| 73RD ST | BLACKBURN AVE | FAIRVIEW WEST | 1614 | 19-24 | 3868 | 325 | 1.50 | 162 | 0.75 |
| 74TH ST | GRAND AVE | FAIRVIEW WEST | 778 | 19-24 | 2204 | 185 | 1.50 | 93 | 0.75 |
| 75TH ST | BLACKBURN AVE | GRAND AVE | 406 | 19-22 | 1031 | 87 | 1.50 | 43 | 0.75 |
| BAKER CT | CUL DE SAC | SPRINGSIDE AVE | 246 | 27 | 1171 | 98 | 1.50 | 49 | 0.75 |
| BLACKBURN AVE | 75TH ST | 73RD ST | 968 | 19-24 | 2574 | 216 | 1.50 | 108 | 0.75 |
| DEXTER RD | S. OF RICHARDS AVE | 71ST ST | 1925 | 27 | 6051 | 508 | 1.50 | 254 | 0.75 |
| FAIRVIEW WEST | 74TH ST | 73RD ST | 858 | 19-22 | 2266 | 190 | 1.50 | 95 | 0.75 |
| FLORENCE AVE | 75TH FRONTAGE | S. LIMITS | 1228 | 28 | 3848 | 323 | 1.50 | 269 | 1.25 |
| GRAND AVE | 73RD ST | 75TH ST | 840 | 19-24 | 2119 | 178 | 1.50 | 89 | 0.75 |
| KELLY PL | CUL DE SAC | RICHARDS AVE | 400 | 27 | 1629 | 137 | 1.50 | 68 | 0.75 |
| RICHARDS AVE | SPRINGSIDE AVE | DEXTER RD | 1006 | 27 | 3109 | 261 | 1.50 | 131 | 0.75 |
| SARATOGA AVE | 67TH ST | S. OF 68TH ST | 1276 | 28 | 4023 | 338 | 1.50 | 169 | 0.75 |
| SPRINGSIDE AVE | RICHARDS AVE | DEXTER RD | 1234 | 27 | 3984 | 335 | 1.50 | 167 | 0.75 |
| STANFORD / MATTHIAS | DUNHAM RD. | SOUTH END | 751 | 28 | 2662 | 224 | 1.50 | 149 | 1.00 |
| TERRACE DR | CUL DE SAC | 71ST ST | 148 | 27 | 872 | 73 | 1.50 | | |
| WILLARD PL | CUL DE SAC | DEXTER RD | 255 | 27 | 1200 | 101 | 1.50 | 50 | 0.75 |
| | | T0tals> | 16748 | | 53003 | 4521 | | 2280 | |
| | | Miles> | 3.17 | | | | | | |

SCHEDULE OF QUANTITIES

2017 RESURFACING (B)
SCHEDULE OF QUANTITIES

| STREET | HMA BINDER (TON) | MIN. THICKNESS (IN) | BIT. TACK (LB) | CL D, Ty 4 4" (SY) | CL D, Special 4" (SY) | CL D, Ty 4 6" (SY) | CL D, Special 6" (SY) | PAVE REM & HMA REPL 8" (SY) | PGE SPECIAL (CY) | HAUL SPECIAL WASTE (LOAD) |
|---|---|---|---|---|---|---|---|---|---|---|
| 67TH ST | | | 3354 | 974 | | 286 | | 30 | 120 | |
| 68TH ST | | | 2807 | 1371 | | | | | 217 | |
| 71ST TERRACE | 177 | 2.50 | 854 | | | | | | 15 | |
| 73RD ST | | | 2611 | 478 | 80 | | | | | |
| 74TH ST | | | 1488 | 323 | 20 | | | | | |
| 75TH ST | | | 696 | 206 | | | | | | |
| BAKER CT | | | 790 | 242 | | | | | | |
| BLACKBURN AVE | | | 1737 | 1000 | 100 | | | | | |
| DEXTER RD | | | 4084 | 1137 | | | | | | |
| FAIRVIEW WEST | | | 1530 | 300 | 42 | | | | | 1 |
| FLORENCE AVE | | | 2597 | 1500 | | | | | 15 | |
| GRAND AVE | | | 1430 | 400 | | | | | | |
| KELLY PL | | | 1100 | 451 | | | | | | |
| RICHARDS AVE | | | 2099 | 924 | | | | | | |
| SARATOGA AVE | | | 2716 | 630 | | | 50 | 10 | 25 | |
| SPRINGSIDE AVE | | | 2689 | 1190 | | | | | | |
| STANFORD / MATTHIAS | | | 1797 | 1065 | 106 | | | | | |
| TERRACE DR | 122 | 2.50 | 589 | | | | | | 15 | |
| WILLARD PL | | | 810 | 140 | | | | | | |
| | 299 | | 35778 | 12331 | 348 | 286 | 50 | 40 | 407 | 1 |

SCHEDULE OF QUANTITIES

2017 RESURFACING (B)
SCHEDULE OF QUANTITIES

| STREET | CURB REM. (LF) | C & G TY M-3.12 (LF) | C & G TY M-4.12 (LF) | C & G TY M-6.12 (LF) | C & G TY B-6.0 R.FORCE (LF) | C & G TY B-6.12 (LF) | C & G TY B-6.12 REINFORCE(LF) | C & G TY B-6.18 (LF) | M.H. ADJ. (EA) |
|---|---|---|---|---|---|---|---|---|---|
| 67TH ST | 1259 | 490 | 165 | | | 594 | | 10 | 2 |
| 68TH ST | 1129 | | | | | 819 | 300 | 10 | |
| 71ST TERRACE | 165 | 165 | | | | | | | 1 |
| 73RD ST | 1595 | 830 | | 765 | | | | | 2 |
| 74TH ST | 745 | 720 | | 25 | | | | | 2 |
| 75TH ST | 60 | | | 60 | | | | | 1 |
| BAKER CT | 240 | 240 | | | | | | | |
| BLACKBURN AVE | 945 | 940 | | 5 | | | | | |
| DEXTER RD | 1905 | 1905 | | | | | | | |
| FAIRVIEW WEST | 375 | | | 375 | | | | | |
| FLORENCE AVE | 1201 | 750 | | | | 441 | | 10 | |
| GRAND AVE | 805 | 700 | | 105 | | | | | 1 |
| KELLY PL | 387 | 387 | | | | | | | |
| RICHARDS AVE | 903 | 903 | | | | | | | |
| SARATOGA AVE | 1236 | 588 | | | | 628 | | 20 | |
| SPRINGSIDE AVE | 1213 | 1213 | | | | | | | |
| STANFORD / MATTHIAS | 569 | 340 | | | 40 | 169 | | 20 | 1 |
| TERRACE DR | 147 | 147 | | | | | | | 1 |
| WILLARD PL | 241 | 241 | | | | | | | 1 |
| | 15120 | 10559 | 165 | 1335 | 40 | 2651 | 300 | 70 | 12 |

SCHEDULE OF QUANTITIES

2017 RESURFACING (B)
SCHEDULE OF QUANTITIES

| STREET | M.H. ADJ. SPECIAL (EA) | M.H. ADJ. W/ NEW TY 1 FR (EA) | M.H. RECON (EA) | IN. ADJ. (EA) | IN. ADJ W/ NEW TY 3 SP FR (EA) | IN. RECON W/ NEW TY 3 SP FR (EA) | NEW 2' IN. W/ TY 3 SP FR (EA) | STORM SEWER 15" (LF) |
|---|---|---|---|---|---|---|---|---|
| 67TH ST | 3 | 1 | | 3 | | 1 | | |
| 68TH ST | 1 | | | 5 | | | 1 | 28 |
| 71ST TERRACE | | | | 3 | | | | |
| 73RD ST | 3 | | 1 | 1 | | | | |
| 74TH ST | 1 | | | | | | | |
| 75TH ST | | | | | | | | |
| BAKER CT | | | | | | | | |
| BLACKBURN AVE | | | | | | | | |
| DEXTER RD | 1 | | | 13 | | | | |
| FAIRVIEW WEST | | | | 1 | | | | |
| FLORENCE AVE | 2 | | | 2 | 1 | | | |
| GRAND AVE | 3 | | | | | | | |
| KELLY PL | | | | 2 | | | | |
| RICHARDS AVE | | | | 5 | | | | |
| SARATOGA AVE | | | | 1 | 2 | | | |
| SPRINGSIDE AVE | 1 | | | 8 | | | | |
| STANFORD / MATTHIAS | | | | 3 | 2 | | | |
| TERRACE DR | | | | 2 | | | | |
| WILLARD PL | | | | | | | | |
| | 15 | 1 | 1 | 49 | 5 | 1 | 1 | 28 |

SCHEDULE OF QUANTITIES

2017 RESURFACING (B)
SCHEDULE OF QUANTITIES

| STREET | INLET FILTERS (EA) | INLET FILTERS CLEANING (EA) | HMA SURF.REM. 1.75" (SY) | HMA SURF.REM. 2" (SY) | HMA SURF.REM. 2.5" (SY) | HMA SURF.REM. 3" (SY) | HMA SURF.REM. 4" (SY) | AGG BASE PREP (SY) |
|---|---|---|---|---|---|---|---|---|
| 67TH ST | 5 | 5 | | 2331 | | 2638 | | |
| 68TH ST | 8 | 8 | | 4158 | | | | |
| 71ST TERRACE | 3 | 3 | | | | | 1265 | 1265 |
| 73RD ST | 4 | 4 | | | 3868 | | | |
| 74TH ST | | | | | 2204 | | | |
| 75TH ST | | | | | 1031 | | | |
| BAKER CT | | | | | 1171 | | | |
| BLACKBURN AVE | 3 | 3 | | | 2574 | | | |
| DEXTER RD | 13 | 13 | | | 6051 | | | |
| FAIRVIEW WEST | 2 | 2 | | | 2266 | | | |
| FLORENCE AVE | | | 3848 | | | | | |
| GRAND AVE | 3 | 3 | | | 2119 | | | |
| KELLY PL | 2 | 2 | | | 1629 | | | |
| RICHARDS AVE | 5 | 5 | | | 3109 | | | |
| SARATOGA AVE | 4 | 4 | | 4023 | | | | |
| SPRINGSIDE AVE | 8 | 8 | | | 3984 | | | |
| STANFORD / MATTHIAS | | | 2662 | | | | | |
| TERRACE DR | 3 | 3 | | | | | 872 | 872 |
| WILLARD PL | | | | | 1200 | | | |
| | 63 | 63 | 6510 | 10512 | 31206 | 2638 | 2137 | 2137 |

SCHEDULE OF QUANTITIES

2017 RESURFACING (B)
SCHEDULE OF QUANTITIES

| STREET | AGG BASE REPAIR (TON) | TEMP ACCESS AGG (TON) | SIDEWALK REMOVE (SF) | SIDEWALK 5" (SF) | SIDEWALK 6" (SF) | DETECTABLE WARNINGS (SF) | DÉCOR PAVER DRIVE (SY) | PKWY REST (SY) | TEMP HMA RAMP (SY) | ROOT PRUNE (EA) |
|---|---|---|---|---|---|---|---|---|---|---|
| 67TH ST | | | 805 | 705 | 100 | 50 | 2 | 400 | 9 | |
| 68TH ST | | | 910 | 660 | 75 | 20 | | 614 | 7 | |
| 71ST TERRACE | 20 | 2 | 800 | 725 | | 40 | | 178 | | 1 |
| 73RD ST | | | | | | | | 370 | | |
| 74TH ST | | | | | | | | 12 | | |
| 75TH ST | | | | | | | | 28 | | |
| BAKER CT | | | 260 | 125 | 135 | | | 216 | | |
| BLACKBURN AVE | | | | | | | | 2 | | |
| DEXTER RD | | | 3200 | 2650 | 305 | 150 | | 1895 | | 1 |
| FAIRVIEW WEST | | | 100 | 100 | | 20 | | 184 | | |
| FLORENCE AVE | | | 555 | 455 | 100 | 20 | | 255 | 5 | |
| GRAND AVE | | | 50 | 50 | | | | 49 | | |
| KELLY PL | | | 225 | 100 | 125 | | 7 | 370 | | |
| RICHARDS AVE | | | 1960 | 1475 | 425 | 40 | | 975 | | |
| SARATOGA AVE | | | 800 | 575 | 225 | 40 | | 366 | | |
| SPRINGSIDE AVE | | | 1940 | 1510 | 325 | 60 | 9 | 1111 | | |
| STANFORD / MATTHIAS | | | 485 | 485 | | 20 | | 197 | | |
| TERRACE DR | 20 | 2 | 870 | 770 | 100 | 40 | | 191 | | |
| WILLARD PL | | | 455 | 250 | 205 | | | 248 | | |
| | 40 | 4 | 13415 | 10635 | 2120 | 500 | 18 | 7661 | 21 | 2 |

SCHEDULE OF QUANTITIES

2017 RESURFACING (B)
SCHEDULE OF QUANTITIES

| STREET | HMA DRIVE REMOVE (SY) | HMA DRIVE 3", (SY) | PCC DRIVE REMOVE (SY) | PCC DRIVE 6", (SY) | WH. PAVT. MARK. LINE 6" (LF) | WH. PAVT. MARK. LINE 24" (LF) | EROSION BARRIER, SP (LF) |
|---|---|---|---|---|---|---|---|
| 67TH ST | 43 | 43 | 30 | 30 | 316 | 17 | 30 |
| 68TH ST | | | 56 | 56 | 235 | 14 | |
| 71ST TERRACE | | | | | | 14 | |
| 73RD ST | | | | | | | 75 |
| 74TH ST | | | | | | | |
| 75TH ST | | | | | | | |
| BAKER CT | | | 110 | 110 | | | |
| BLACKBURN AVE | | | | | | | |
| DEXTER RD | | | 276 | 276 | | 14 | |
| FAIRVIEW WEST | | | | | | | |
| FLORENCE AVE | 66 | 66 | | | | | |
| GRAND AVE | | | | | | | |
| KELLY PL | | | 171 | 171 | | | |
| RICHARDS AVE | | | 387 | 387 | | | |
| SARATOGA AVE | | | 147 | 147 | | | |
| SPRINGSIDE AVE | | | 226 | 226 | | | |
| STANFORD / MATTHIAS | | | | | 64 | 14 | |
| TERRACE DR | | | 22 | 22 | | 14 | |
| WILLARD PL | | | 112 | 112 | | | |
| | 109 | 109 | 1537 | 1537 | 615 | 87 | 105 |

SCHEDULE OF QUANTITIES

Illinois Department of Transportation

# Local Agency Proposal Bid Bond

Route Various
County DuPage
Local Agency Village of Downers Grove
Section N/A

**RETURN WITH BID**

## PAPER BID BOND

WE Geneva Construction Company, P.O. Box 998, Aurora, IL 60507 as PRINCIPAL,

and Fidelity and Deposit Company of Maryland, P.O. Box 1227, Baltimore, MD 21203 as SURETY,

are held jointly, severally and firmly bound unto the above Local Agency (hereafter referred to as "LA") in the penal sum of 5% of the total bid price, or for the amount specified in the proposal documents in effect on the date of invitation for bids whichever is the lesser sum. We bind ourselves, our heirs, executors, administrators, successors, and assigns, jointly pay to the LA this sum under the conditions of this instrument.

WHEREAS THE CONDITION OF THE FOREGOING OBLIGATION IS SUCH that, the said PRINCIPAL is submitting a written proposal to the LA acting through its awarding authority for the construction of the work designated as the above section.

THEREFORE if the proposal is accepted and a contract awarded to the PRINCIPAL by the LA for the above designated section and the PRINCIPAL shall within fifteen (15) days after award enter into a formal contract, furnish surety guaranteeing the faithful performance of the work, and furnish evidence of the required insurance coverage, all as provided in the "Standard Specifications for Road and Bridge Construction" and applicable Supplemental Specifications, then this obligation shall become void; otherwise it shall remain in full force and effect.

IN THE EVENT the LA determines the PRINCIPAL has failed to enter into a formal contract in compliance with any requirements set forth in the preceding paragraph, then the LA acting through its awarding authority shall immediately be entitled to recover the full penal sum set out above, together with all court costs, all attorney fees, and any other expense of recovery.

IN TESTIMONY WHEREOF, the said PRINCIPAL and the said SURETY have caused this instrument to be signed by their respective officers this 21st day of June, 2017

**Principal**

Geneva Construction Company
(Company Name)

By: , Vice President
Cass Price (Signature and Title)

(Company Name)

By:
(Signature and Title)

(If PRINCIPLE is a joint venture of two or more contractors, the company names, and authorized signatures of each contractor must be affixed.)

**Surety**

Fidelity and Deposit Company of Maryland
(Name of Surety)

By:
Brian V. Konen (Signature of Attorney-in-Fact)

STATE OF ILLINOIS,
COUNTY OF Kendall

I. Elizabeth A. Simpson, a Notary Public in and for said county,
do hereby certify that Cass Price and Brian V. Konen
( Insert names of individuals signing on behalf of PRINCIPAL & SURETY)

who are each personally known to me to be the same persons whose names are subscribed to the foregoing instrument on behalf of PRINCIPAL and SURETY, appeared before me this day in person and acknowledged respectively, that they signed and delivered said instruments as their free and voluntary act for the uses and purposes therein set forth.

Given under my hand and notarial seal this 21st day of June, 2017

My commission expires 4/30/18

Elizabeth A. Simpson
(Notary Public)

OFFICIAL SEAL
ELIZABETH A SIMPSON
NOTARY PUBLIC, STATE OF ILLINOIS
MY COMMISSION EXPIRES 4/30/2018

## ELECTRONIC BID BOND

☐ **Electronic bid bond is allowed (box must be checked by LA if electronic bid bond is allowed)**

The Principal may submit an electronic bid bond, in lieu of completing the above section of the Proposal Bid Bond Form. By providing an electronic bid bond ID code and signing below, the Principal is ensuring the identified electronic bid bond has been executed and the Principal and Surety are firmly bound unto the LA under the conditions of the bid bond as shown above. (If PRINCIPAL is a joint venture of two or more contractors, an electronic bid bond ID code, company/Bidder name title and date must be affixed for each contractor in the venture.)

Electronic Bid Bond ID Code

(Company/Bidder Name)

(Signature and Title)

Date



BLR 12230 (Rev. 7/05

**ZURICH AMERICAN INSURANCE COMPANY**
**COLONIAL AMERICAN CASUALTY AND SURETY COMPANY**
**FIDELITY AND DEPOSIT COMPANY OF MARYLAND**
**POWER OF ATTORNEY**

KNOW ALL MEN BY THESE PRESENTS: That the ZURICH AMERICAN INSURANCE COMPANY, a corporation of the State of New York, the COLONIAL AMERICAN CASUALTY AND SURETY COMPANY, a corporation of the State of Maryland, and the FIDELITY AND DEPOSIT COMPANY OF MARYLAND a corporation of the State of Maryland (herein collectively called the "Companies"), by **MICHAEL BOND, Vice President,** in pursuance of authority granted by Article V, Section 8, of the By-Laws of said Companies, which are set forth on the reverse side hereof and are hereby certified to be in full force and effect on the date hereof, do hereby nominate, constitute, and appoint **Brian V. KONEN, Jerry S. KNUDTSON and Terry P. KARTHEISER, all of Aurora, Illinois, EACH** its true and lawful agent and Attorney-in-Fact, to make, execute, seal and deliver, for, and on its behalf as surety, and as its act and deed: **any and all bonds and undertakings,** and the execution of such bonds or undertakings in pursuance of these presents, shall be as binding upon said Companies, as fully and amply, to all intents and purposes, as if they had been duly executed and acknowledged by the regularly elected officers of the ZURICH AMERICAN INSURANCE COMPANY at its office in New York, New York., the regularly elected officers of the COLONIAL AMERICAN CASUALTY AND SURETY COMPANY at its office in Owings Mills, Maryland., and the regularly elected officers of the FIDELITY AND DEPOSIT COMPANY OF MARYLAND at its office in Owings Mills, Maryland., in their own proper persons.

The said Vice President does hereby certify that the extract set forth on the reverse side hereof is a true copy of Article V, Section 8, of the By-Laws of said Companies, and is now in force.

IN WITNESS WHEREOF, the said Vice-President has hereunto subscribed his/her names and affixed the Corporate Seals of the said **ZURICH AMERICAN INSURANCE COMPANY, COLONIAL AMERICAN CASUALTY AND SURETY COMPANY, and FIDELITY AND DEPOSIT COMPANY OF MARYLAND,** this 24th day of March, A.D. 2017.

**ATTEST:**

**ZURICH AMERICAN INSURANCE COMPANY**
**COLONIAL AMERICAN CASUALTY AND SURETY COMPANY**
**FIDELITY AND DEPOSIT COMPANY OF MARYLAND**

By: _____
*Secretary*
*Michael McKibben*

_____
*Vice President*
*Michael Bond*

**State of** Maryland
County of Baltimore

On this 24th day of March, A.D. 2017, before the subscriber, a Notary Public of the State of Maryland, duly commissioned and qualified, **MICHAEL BOND, Vice President, and MICHAEL MCKIBBEN, Secretary,** of the Companies, to me personally known to be the individuals and officers described in and who executed the preceding instrument, and acknowledged the execution of same, and being by me duly sworn, deposeth and saith, that he/she is the said officer of the Company aforesaid, and that the seals affixed to the preceding instrument are the Corporate Seals of said Companies, and that the said Corporate Seals and the signature as such officer were duly affixed and subscribed to the said instrument by the authority and direction of the said Corporations.

IN TESTIMONY WHEREOF, I have hereunto set my hand and affixed my Official Seal the day and year first above written.

_____
Constance A. Dunn, Notary Public
My Commission Expires: July 9, 2019

## EXTRACT FROM BY-LAWS OF THE COMPANIES

"Article V, Section 8, Attorneys-in-Fact. The Chief Executive Officer, the President, or any Executive Vice President or Vice President may, by written instrument under the attested corporate seal, appoint attorneys-in-fact with authority to execute bonds, policies, recognizances, stipulations, undertakings, or other like instruments on behalf of the Company, and may authorize any officer or any such attorney-in-fact to affix the corporate seal thereto; and may with or without cause modify of revoke any such appointment or authority at any time."

## CERTIFICATE

I, the undersigned, Vice President of the ZURICH AMERICAN INSURANCE COMPANY, the COLONIAL AMERICAN CASUALTY AND SURETY COMPANY, and the FIDELITY AND DEPOSIT COMPANY OF MARYLAND, do hereby certify that the foregoing Power of Attorney is still in full force and effect on the date of this certificate; and I do further certify that Article V, Section 8, of the By-Laws of the Companies is still in force.

This Power of Attorney and Certificate may be signed by facsimile under and by authority of the following resolution of the Board of Directors of the ZURICH AMERICAN INSURANCE COMPANY at a meeting duly called and held on the 15th day of December 1998.

RESOLVED: "That the signature of the President or a Vice President and the attesting signature of a Secretary or an Assistant Secretary and the Seal of the Company may be affixed by facsimile on any Power of Attorney...Any such Power or any certificate thereof bearing such facsimile signature and seal shall be valid and binding on the Company."

This Power of Attorney and Certificate may be signed by facsimile under and by authority of the following resolution of the Board of Directors of the COLONIAL AMERICAN CASUALTY AND SURETY COMPANY at a meeting duly called and held on the 5th day of May, 1994, and the following resolution of the Board of Directors of the FIDELITY AND DEPOSIT COMPANY OF MARYLAND at a meeting duly called and held on the 10th day of May, 1990.

RESOLVED: "That the facsimile or mechanically reproduced seal of the company and facsimile or mechanically reproduced signature of any Vice-President, Secretary, or Assistant Secretary of the Company, whether made heretofore or hereafter, wherever appearing upon a certified copy of any power of attorney issued by the Company, shall be valid and binding upon the Company with the same force and effect as though manually affixed.

IN TESTIMONY WHEREOF, I have hereunto subscribed my name and affixed the corporate seals of the said Companies, this 21 day of June, 2017.

Gerald F. Haley

Gerald F. Haley, Vice President

**TO REPORT A CLAIM WITH REGARD TO A SURETY BOND, PLEASE SUBMIT ALL REQUIRED INFORMATION TO:**

Zurich American Insurance Co.
Attn: Surety Claims
1299 Zurich Way
Schaumburg, IL 60196-1056

ZURICH

# THIS IMPORTANT DISCLOSURE NOTICE IS PART OF YOUR BOND

We are making the following informational disclosures in compliance with The Terrorism Risk Insurance Act of 2002. No action is required on your part.

## Disclosure of Terrorism Premium

The premium charge for risk of loss resulting from acts of terrorism (as defined in the Act) under this bond is $__waived__. This amount is reflected in the total premium for this bond.

## Disclosure of Availability of Coverage for Terrorism Losses

As required by the Terrorism Risk Insurance Act of 2002, we have made available to you coverage for losses resulting from acts of terrorism (as defined in the Act) with terms, amounts, and limitations that do not differ materially as those for losses arising from events other than acts of terrorism.

## Disclosure of Federal Share of Insurance Company's Terrorism Losses

The Terrorism Risk Insurance Act of 2002 establishes a mechanism by which the United States government will share in insurance company losses resulting from acts of terrorism (as defined in the Act) after a insurance company has paid losses in excess of an annual aggregate deductible. For 2002, the insurance company deductible is 1% of direct earned premium in the prior year; for 2003, 7% of direct earned premium in the prior year; for 2004, 10% of direct earned premium in the prior year; and for 2005, 15% of direct earned premium in the prior year. The federal share of an insurance company's losses above its deductible is 90%. In the event the United States government participates in losses, the United States government may direct insurance companies to collect a terrorism surcharge from policyholders. The Act does not currently provide for insurance industry or United States government participation in terrorism losses that exceed $100 billion in any one calendar year.

## Definition of Act of Terrorism

The Terrorism Risk Insurance Act defines "act of terrorism" as any act that is certified by the Secretary of the Treasury, in concurrence with the Secretary of State and the Attorney General of the United States:

1. to be an act of terrorism;
2. to be a violent act or an act that is dangerous to human life, property or infrastructure;
3. to have resulted in damage within the United States, or outside of the United States in the case of an air carrier (as defined in section 40102 of title 49, United 17 States Code) or a United States flag vessel (or a vessel based principally in the United States, on which United States income tax is paid and whose insurance coverage is subject to regulation in the United States), or the premises of a United States mission; and
4. to have been committed by an individual or individuals acting on behalf of any foreign person or foreign interest as part of an effort to coerce the civilian population of the United States or to influence the policy or affect the conduct of the United States Government by coercion.

But, no act shall be certified by the Secretary as an act of terrorism if the act is committed as part of the course of a war declared by Congress (except for workers' compensation) or property and casualty insurance losses resulting from the act, in the aggregate, do not exceed $5,000,000.

**These disclosures are informational only and do not modify your bond or affect your rights under the bond.**

Copyright Zurich American Insurance Company 2003

Illinois Department of Transportation

# Apprenticeship or Training Program Certification

Return with Bid

| | |
|---|---|
| Route | Various |
| County | DuPage |
| Local Agency | Downers Grove |
| Section | 17-00000-01-GM |

***All contractors are required to complete the following certification:***

☒ For this contract proposal or for all groups in this deliver and install proposal.

☐ For the following deliver and install groups in this material proposal:

Illinois Department of Transportation policy, adopted in accordance with the provisions of the Illinois Highway Code, requires this contract to be awarded to the lowest responsive and responsible bidder. The award decision is subject to approval by the Department. In addition to all other responsibility factors, this contract or deliver and install proposal requires all bidders and all bidders' subcontractors to disclose participation in apprenticeship or training programs that are (1) approved by and registered with the United States Department of Labor's Bureau of Apprenticeship and Training, and (2) applicable to the work of the above indicated proposals or groups. Therefore, all bidders are required to complete the following certification:

I. Except as provided in paragraph IV below, the undersigned bidder certifies that it is a participant, either as an individual or as part of a group program, in an approved apprenticeship or training program applicable to each type of work or craft that the bidder will perform with its own employees.

II. The undersigned bidder further certifies for work to be performed by subcontract that each of its subcontractors submitted for approval either (A) is, at the time of such bid, participating in an approved, applicable apprenticeship or training program; or (B) will, prior to commencement of performance of work pursuant to this contract, establish participation in an approved apprenticeship or training program applicable to the work of the subcontract.

III. The undersigned bidder, by inclusion in the list in the space below, certifies the official name of each program sponsor holding the Certificate of Registration for all of the types of work or crafts in which the bidder is a participant and that will be performed with the bidder's employees. Types of work or craft that will be subcontracted shall be included and listed as subcontract work. The list shall also indicate any type of work or craft job category for which there is no applicable apprenticeship or training program available.

See Attached

IV. Except for any work identified above, any bidder or subcontractor that shall perform all or part of the work of the contract or deliver and install proposal solely by individual owners, partners or members and not by employees to whom the payment of prevailing rates of wages would be required, check the following box, and identify the owner/operator workforce and positions of ownership. ☐

_____

_____

_____

_____

_____

The requirements of this certification and disclosure are a material part of the contract, and the contractor shall require this certification provision to be included in all approved subcontracts. The bidder is responsible for making a complete report and shall make certain that each type of work or craft job category that will be utilized on the project is accounted for and listed. The Department at any time before or after award may require the production of a copy of each applicable Certificate of Registration issued by the United States Department of Labor evidencing such participation by the contractor and any or all of its subcontractors. In order to fulfill the participation requirement, it shall not be necessary that any applicable program sponsor be currently taking or that it will take applications for apprenticeship, training or employment during the performance of the work of this contract or deliver and install proposal.

Bidder: GENEVA CONSTRUCTION CO.

By: _____ (Signature)

Address: P.O. BOX 998
AURORA, IL 60507-0998

Title: CASS W. PRICE, VICE PRESIDENT

Chicagoland
LABORERS'
District Council Training & Apprentice Fund
www.chicagolaborers.org

22 April 2016

*Executive Director*
Thomas Nordeen

*Labor Trustees*
James P. Connolly
Martin Flanagan
Joseph V. Healy
Charles V. LoVerde III
Joe Riley

*Management Trustees*
Seth Gudeman
Shane Higgins
Joseph Koppers
Robert G. Krug
David Lorig
William Vignocchi

Ms. Peggy Givens
Payroll Manager
Geneva Construction Co., Inc.
P.O. Box 998
Indian Trail and Route 25
Aurora, Illinois 60507-0998

Dear Ms. Givens:

Enclosed you will please find a copy of the Department of Labor certification that you requested recently.

You may also use this letter as verification that Geneva Construction Co., Inc. is indeed signatory to the Chicago Laborers District Council and contributes to the Laborers Apprenticeship Fund.

Should you require anything further, please do not hesitate to contact me.

Yours very truly,

Robbin L. Blakely
Office Manager

RLB
ENC

**Carol Stream Location**
1200 Old Gary Avenue
Carol Stream IL 60188
630.653.0006

LiUNA!
*Feel the Power*

**Chicago Location**
5700 West Homer Street
Chicago IL 60639
773.413.3315

# The United States Department of Labor

## Office of Apprenticeship Training, Employer and Labor Services
## Bureau of Apprenticeship and Training
## Certificate of Registration

Chicagoland Laborers' J.A.T.C.
Carol Stream, Illinois
For the Trade - Construction Craft Laborer
Registered as part of the National Apprenticeship Program
in accordance with the basic standards of apprenticeship
established by the Secretary of Labor

April 12, 1999
Date REVISED August 13, 2004

IL017990001
Registration No.

DEPARTMENT OF LABOR · UNITED STATES OF AMERICA

L. L. Chao
Secretary of Labor

Anthony Swoope
Administrator, Apprenticeship Training, Employer and Labor Services

INTERNATIONAL UNION OF OPERATING ENGINEERS
LOCAL UNION NO. 150, 150B, 150A, 150C, 150RA, 150D, 150G, 150M
AFFILIATED WITH THE A.F.L.-C.I.O. AND BUILDING TRADES DEPARTMENT

JAMES M. SWEENEY
PRESIDENT-BUSINESS MANAGER

(708) 482-9600 - FAX (708) 482-7186
6200 JOLIET ROAD
COUNTRYSIDE, IL 60525-3992

April 22, 2016

Geneva Construction Company

Re: Proof of Compliance with 30 ILCS 500/30-22 (6)
our File No. MI-00321

Dear Sir or Madam:

At the request of Geneva Construction Company, I am providing you with evidence of the company's compliance with the apprenticeship requirements in 30 ILCS 500/30-22 (6) of the Illinois Procurement Code. I am submitting this letter along with apprenticeship certificates (Nos.IL012020003, IL008780173).

As a signatory contractor with the International Union of Operating Engineers, Local 150, AFL-CIO, Geneva Construction Company is required by Collective Bargaining Agreement to participate in an applicable apprenticeship and training program approved by and registered with the United States Department of Labor's Bureau of Apprenticeship and Training. The attached certificates are evidence of compliance with the U.S. Department of Labor's apprenticeship requirements.

Thank you for your cooperation in this matter. If you have any questions or concerns, please do not hesitate to contact me.

Very truly yours,
IUOE, Local 150, AFL-CIO
District 1 dispatch office

Maribel Hernandez

mh
Enclosures: Certificates

# The United States Department of Labor

## Office of Apprenticeship Training, Employer and Labor Services
## Bureau of Apprenticeship and Training
## Certificate of Registration

Heavy Equipment Technician Operating Engineers Local #150
Plainfield, Illinois
For the Trade of Repairer (Heavy)
Registered as part of the National Apprenticeship Program
in accordance with the basic standards of apprenticeship
established by the Secretary of Labor

May 5, 2002
Date

IL012020003
Registration No.

DEPARTMENT OF LABOR · UNITED STATES OF AMERICA

Secretary of Labor

Administrator, Apprenticeship Training, Employer and Labor Services

# CEMENT MASONS' UNION
# LOCAL NO. 502

*"Unified Strength Since 1914"*

OPERATIVE PLASTERERS' AND CEMENT MASONS' INTERNATIONAL ASSOCIATION
OF THE UNITED STATES AND CANADA

739 SOUTH 25th AVENUE - BELLWOOD, ILLINOIS 60104
PHONE: 708-544-9100 FAX: 708-544-0232


Friday, April 22, 2016

Reference: Geneva Construction

To Whom It May Concern:

Geneva Construction is in good standing, and participates in our Apprenticeship Program.

Our Apprenticeship Program #1L008820041 is registered with the Department of Labor, Office of Apprenticeship.

If you have any questions, please feel free to call 708-544-9100.

Sincerely,

Lawrence J. Picardi Sr.

Lawrence J. Picardi Sr.
Secretary Treasurer

# Illinois Teamsters Joint Council No. 25 and Employers Apprenticeship & Training Fund

990 NE Frontage Road, Suite 4, Joliet, IL 60431
Office: (815) 773-0700 Fax: (815) 773-1122
Info@illinoisteamsterstraining.org


April 22, 2016

To Whom It May Concern:

This letter will certify that Geneva Construction, is currently contributing and is current with its contributions, as of March 2016, for the Trade of Construction Driver (1032), to the Illinois Teamsters Joint Council No.25 and Employers Apprenticeship & Training Fund.

Any questions, please feel free to contact me at (815) 773-0700.

Very Truly Yours,

Rose Wyler
Administrative Assistant

cc: file

# NORTHERN ILLINOIS
# PLASTERERS & CEMENT MASONS
# JOINT APPRENTICESHIP & TRAINING PROGRAM

Alonzo Schumann
Apprenticeship Coordinator
1102 Rail Dr., Woodstock, IL 60098
Office/Fax 815-527-7489—Cell 630-277-3631

April 22, 2016

To whom it may concern:

Local 11 OPCMIA, Plasterers and Cement Masons verifies that Geneva Construction is a signatory contractor that participates in the National Register Apprenticeship Program with Northern Illinois Plasterers & Cement Masons JATC, Local 11 Joint Apprenticeship Training Program.

Alonzo Schumann
Apprenticeship Coordinator/

Alonzo Schumann

# The United States Department of Labor

## Office of Apprenticeship

## Certificate of Registration of Apprenticeship Program

*N. IL Cement Masons & Plasterers JATC Local #11*
*Rockford, Illinois*
*For the Trades – Cement Mason and Plasterer*
*Registered as part of the National Apprenticeship System*
*in accordance with the basic standards of apprenticeship*
*established by the Secretary of Labor*

*July 26, 1989*
Date

*Revised: August 6, 2012*
Registration No. *IL004-890005*

Secretary of Labor

Administrator, Office of Apprenticeship

RETURN WITH BID

Illinois Department of Transportation

## Affidavit of Illinois Business Office

County DuPage
Local Public Agency Downers Grove
Section Number 17-00000-01-GM
Route Various

State of Illinois )
) ss.
County of Kane )

I, Cass W. Price (Name of Affiant) of North Aurora (City of Affiant), Illinois (State of Affiant),

being first duly sworn upon oath, states as follows:

1. That I am the Vice Presidents (officer or position) of GENEVA CONSTRUCTION CO. (bidder).
2. That I have personal knowledge of the facts herein stated.
3. That, if selected under this proposal, GENEVA CONSTRUCTION CO. (bidder), will maintain a business office in the State of Illinois which will be located in Kane County, Illinois.
4. That this business office will serve as the primary place of employment for any persons employed in the construction contemplated by this proposal.
5. That this Affidavit is given as a requirement of state law as provided in Section 30-22(8) of the Illinois Procurement Code.

(Signature)

CASS W. PRICE, VICE PRESIDENT
(Print Name of Affiant)

This instrument was acknowledged before me on 20th day of June, 2017.

(SEAL)

OFFICIAL SEAL
JESSICA M TOSAW
NOTARY PUBLIC - STATE OF ILLINOIS
MY COMMISSION EXPIRES:10/01/19

Jessica Tosaw
(Signature of Notary Public)

Printed 5/12/2017

BLR 12326 (01/08/14)

# Illinois Department of Transportation

Bureau of Construction
2300 South Dirksen Parkway/Room 322
Springfield, Illinois 62764

## Affidavit of Availability

For the 6/21/2017
(Letting date)

**Instructions:** Complete this form by either typing or using black ink. "Authorization to Bid" will not be issued unless both sides of this form are completed in detail. Use additional forms as needed to list all work.

### Part I. Work Under Contract

List below all work you have under contract as either a prime contractor or a subcontractor. It is required to include all pending low bids not yet awarded or rejected. In a joint venture, list only that portion of the work which is the responsibility of your company. The uncompleted dollar value is to be based upon the most recent engineer's or owners estimate, and must include work subcontracted to others. If no work is contracted, show **NONE.**

| | 1 | 2 | 3 | 4 | Awards Pending | |
|---|---|---|---|---|---|---|
| Contract Number | | | | | | |
| Contract With | CITY OF AURORA | CITY OF WARRENVILLE | AURORA TOWNSHIP | VILLAGE OF WOODRIDGE | | |
| Estimated Completion Date | 08/17 | 08/17 | 09/17 | 08/17 | | |
| Total Contract Price | 510,100.00 | 1,314,300.00 | 251,900.00 | 1,041,500.00 | | Accumulated Totals |
| Uncompleted Dollar Value if Firm is the Prime Contractor | 510,100.00 | 1,314,300.00 | 251,900.00 | 1,041,500.00 | | 3,117,800.00 |
| Uncompleted Dollar Value if Firm is the Subcontractor | | | | | | 0.00 |
| | | | | Total Value of All Work | | 3,117,800.00 |

### Part II. Awards Pending and Uncompleted Work to be done with your

List below the uncompleted dollar value of work for each contract and awards pending to be completed with your own forces. All work subcontracted to others will be listed on the reverse of this form. In a joint venture, list only that portion of the work to be done by your company. If no work is contracted, show NONE.

| | | | | | | Accumulated Totals |
|---|---|---|---|---|---|---|
| Earthwork | 14,200.00 | | | 6,500.00 | | 20,700.00 |
| Portland Cement Concrete Paving | | | | | | 0.00 |
| HMA Plant Mix | 16,200.00 | 580,700.00 | 165,300.00 | 413,000.00 | | 1,175,200.00 |
| HMA Paving | | | | | | 0.00 |
| Clean & Seal Cracks/Joints | | | | | | 0.00 |
| Aggregate Bases & Surfaces | 37,300.00 | 13,400.00 | | 10,000.00 | | 60,700.00 |
| Highway,R.R. and Waterway Structures | | | | | | 0.00 |
| Drainage | 8,400.00 | 25,500.00 | 7,300.0 | 22,900.00 | | 64,100.00 |
| Electrical | | | | | | 0.00 |
| Cover and Seal Coats | 600.00 | | 100.00 | 200.00 | | 900.00 |
| Concrete Construction | 255,400.00 | 384,300.00 | 1,600.00 | 433,300.00 | | 1,074,600.00 |
| Landscaping | | | | | | 0.00 |
| Fencing | | | | | | 0.00 |
| Guardrail | | | | | | 0.00 |
| Painting | | | | | | 0.00 |
| Signing | | | | | | 0.00 |
| Cold Milling, Planning & Rotomilling | 45,500.00 | 69,000.00 | 74,400.00 | 92,500.00 | | 281,400.00 |
| Demolition | | | | | | 0.00 |
| Pavement Markings (Paint) | | | | | | 0.00 |
| Other Construction (List) | | | | | | 0.00 |
| | | | | | | 0.00 |
| | | | | | | 0.00 |
| Totals | 377,600.00 | 1,072,900.00 | 248,700.00 | 978,400.00 | 0.00 | 2,677,600.00 |

Disclosure of this information is **REQUIRED** to accomplish the statutory purpose as outlined in the "Illinois Procurement Code". Failure to comply will result in non-issuance of an "Authorization To Bid." This form has been approved by the State Forms Management Center.

Illinois Department of Transportation

Bureau of Construction
2300 South Dirksen Parkway/Room 322
Springfield, Illinois 62764

## Affidavit of Availability

For the 6/21/2017
(Letting date)

**Instructions**: Complete this form by either typing or using black ink. "Authorization to Bid" will not be issued unless both sides of this form are completed in detail. Use additional forms as needed to list all work.

**Part I. Work Un**

List below all work you have under contract as either a prime contractor or a subcontractor. It is required to include all pending low bids not yet awarded or rejected. In a joint venture, list only that portion of the work which is the responsibility of your company. The uncompleted dollar value is to be based upon the most recent engineer's or owners estimate, and must include work subcontracted to others. If no work is contracted, show **NONE.**

| | 5 | 6 | 7 | 8 | Awards Pending | |
|---|---|---|---|---|---|---|
| **Contract Number** | | 87661 | | | | |
| **Contract With** | PRIVATE | IDOT | PRIVATE | PRIVATE | | |
| **Estimated Completion Date** | 10/17 | 07/17 | 11/17 | 06/17 | | |
| **Total Contract Price** | 827,200.00 | 581,300.00 | 1,251,500.00 | 429,400.00 | | **Accumulated Totals** |
| **Uncompleted Dollar Value if Firm is the Prime Contractor** | | 449,200.00 | | 206,200.00 | | 3,773,200.00 |
| **Uncompleted Dollar Value if Firm is the Subcontractor** | 505,800.00 | | 525,600.00 | | | 1,031,400.00 |
| | | | | **Total Value of All Work** | | 4,804,600.00 |

**Part II. Awards Pending and Uncompleted Work to be done with your own forces.**

List below the uncompleted dollar value of work for each contract and awards pending to be completed with your own forces. All work Subcontracted to others will be listed on the reverse of this form. In a joint venture, list only that portion of the work to be done by your company. If no work is contracted, show NONE.

| | | | | | | **Accumulated Totals** |
|---|---|---|---|---|---|---|
| **Earthwork** | | | | | | 20,700.00 |
| **Portland Cement Concrete Paving** | | | | | | 0.00 |
| **HMA Plant Mix** | 488,200.00 | 171,600.00 | 493,700.00 | 134,200.00 | | 2,462,900.00 |
| **HMA Paving** | | 7,100.00 | | | | 7,100.00 |
| **Clean & Seal Cracks/Joints** | | 2,000.00 | | 800.00 | | 2,800.00 |
| **Aggregate Bases & Surfaces** | 12,800.00 | 35,700.00 | | 60,700.00 | | 169,900.00 |
| **Highway,R.R. and Waterway Structures** | | | | | | 0.00 |
| **Drainage** | | | | | | 64,100.00 |
| **Electrical** | | | | | | 0.00 |
| **Cover and Seal Coats** | | 12,100.00 | 1,200.00 | 8,700.00 | | 22,900.00 |
| **Concrete Construction** | | 44,400.00 | | 200.00 | | 1,119,200.00 |
| **Landscaping** | | | | | | 0.00 |
| **Fencing** | | | | | | 0.00 |
| **Guardrail** | | | | | | 0.00 |
| **Painting** | | | | | | 0.00 |
| **Signing** | | | | | | 0.00 |
| **Cold Milling, Planning & Rotomilling** | 4,800.00 | 400.00 | 30,700.00 | 1,600.00 | | 318,900.00 |
| **Demolition** | | | | | | 0.00 |
| **Pavement Markings (Paint)** | | | | | | 0.00 |
| **Other Construction (List)** | | | | | | 0.00 |
| | | | | | | 0.00 |
| | | | | | | 0.00 |
| **Totals** | 505,800.00 | 273,300.00 | 525,600.00 | 206,200.00 | 0.00 | 4,188,500.00 |

Disclosure of this information is **REQUIRED** to accomplish the statutory purpose as outlined in the "Illinois Procurement Code". Failure to comply will result in non-issuance of an "Authorization To Bid." This form has been approved by the State Forms Management Center.

**Illinois Department of Transportation**

Bureau of Construction
2300 South Dirksen Parkway/Room 322
Springfield, Illinois 62764

# Affidavit of Availability

For the 6/21/2017
(Letting date)

**Instructions:** Complete this form by either typing or using black ink. "Authorization to Bid" will not be issued unless both sides of this form are completed in detail. Use additional forms as needed to list all work.

## Part I. Work Under Contract

List below all work you have under contract as either a prime contractor or a subcontractor. It is required to include all pending low bids not yet awarded or rejected. In a joint venture, list only that portion of the work which is the responsibility of your company. The uncompleted dollar value is to be based upon the most recent engineer's or owners estimate, and must include work subcontracted to others. If no work is contracted, show **NONE.**

| | 9 | 10 | 11 | 12 | Awards Pending | |
|---|---|---|---|---|---|---|
| **Contract Number** | | DU081 | | | | |
| **Contract With** | PRIVATE | IDOT | PRIVATE | PRIVATE | | |
| **Estimated Completion Date** | 11/17 | 09/17 | 09/17 | 11/17 | | |
| **Total Contract Price** | 133,300.00 | 150,300.00 | 79,900.00 | 284,400.00 | | **Accumulated Totals** |
| **Uncompleted Dollar Value if Firm is the Prime Contractor** | | | | | 0.00 | 3,773,200.00 |
| **Uncompleted Dollar Value if Firm is the Subcontractor** | 133,300.00 | 150,300.00 | 69,100.00 | 284,400.00 | | 1,668,500.00 |
| | | | | **Total Value of All Work** | | 5,441,700.00 |

## Part II. Awards Pending and Uncompleted Work to be done with your

List below the uncompleted dollar value of work for each contract and awards pending to be completed with your own forces. All work Subcontracted to others will be listed on the reverse of this form. In a joint venture, list only that portion of the work to be done by your company. If no work is contracted, show NONE.

| | | | | | | **Accumulated Totals** |
|---|---|---|---|---|---|---|
| **Earthwork** | | | | | | 20,700.00 |
| **Portland Cement Concrete Paving** | | | | | | 0.00 |
| **HMA Plant Mix** | 107,900.00 | 142,500.00 | 66,800.00 | 96,100.00 | | 2,876,200.00 |
| **HMA Paving** | | | | | | 7,100.00 |
| **Clean & Seal Cracks/Joints** | | | | | | 2,800.00 |
| **Aggregate Bases & Surfaces** | 17,900.00 | | | 54,800.00 | | 242,600.00 |
| **Highway,R.R. and Waterway Structures** | | | | | | 0.00 |
| **Drainage** | | | | | | 64,100.00 |
| **Electrical** | | | | | | 0.00 |
| **Cover and Seal Coats** | 3,100.00 | 7,800.00 | 2,300.00 | 5,900.00 | | 42,000.00 |
| **Concrete Construction** | | | | 127,600.00 | | 1,246,800.00 |
| **Landscaping** | | | | | | 0.00 |
| **Fencing** | | | | | | 0.00 |
| **Guardrail** | | | | | | 0.00 |
| **Painting** | | | | | | 0.00 |
| **Signing** | | | | | | 0.00 |
| **Cold Milling, Planning & Rotomilling** | 4,400.00 | | | | | 323,300.00 |
| **Demolition** | | | | | | 0.00 |
| **Pavement Markings (Paint)** | | | | | | 0.00 |
| **Other Construction (List)** | | | | | | 0.00 |
| | | | | | | 0.00 |
| | | | | | | 0.00 |
| **Totals** | 133,300.00 | 150,300.00 | 69,100.00 | 284,400.00 | 0.00 | 4,825,600.00 |

Disclosure of this information is **REQUIRED** to accomplish the statutory purpose as outlined in the "Illinois Procurement Code". Failure to comply will result in non-issuance of an "Authorization To Bid." This form has been approved by the State Forms Management Center.

Illinois Department of Transportation

Bureau of Construction
2300 South Dirksen Parkway/Room 322
Springfield, Illinois 62764

# Affidavit of Availability

For the 6/21/2017
(Letting date)

**Instructions:** Complete this form by either typing or using black ink. "Authorization to Bid" will not be issued unless both sides of this form are completed in detail. Use additional forms as needed to list all work.

## Part I. Work Under Contract

List below all work you have under contract as either a prime contractor or a subcontractor. It is required to include all pending low bids not yet awarded or rejected. In a joint venture, list only that portion of the work which is the responsibility of your company. The uncompleted dollar value is to be based upon the most recent engineer's or owners estimate, and must include work subcontracted to others. If no work is contracted, show **NONE.**

| | 13 | 14 | 15 | 16 | Awards Pending | |
|---|---|---|---|---|---|---|
| **Contract Number** | 61A30 | 60T23 | 62B25 | 61030 | | |
| **Contract With** | IDOT | IDOT | IDOT | IDOT | | |
| **Estimated Completion Date** | 11/17 | 11/17 | 06/17 | 10/17 | | |
| **Total Contract Price** | 1,436,000.00 | 488,600.00 | 625,900.00 | 1,791,100.00 | | **Accumulated Totals** |
| **Uncompleted Dollar Value if Firm is the Prime Contractor** | | | 596,600.00 | 1,321,900.00 | 0.00 | 5,691,700.00 |
| **Uncompleted Dollar Value if Firm is the Subcontractor** | 1,436,000.00 | 488,600.00 | | | | 3,593,100.00 |
| | | | | **Total Value of All Work** | | 9,284,800.00 |

## Part II. Awards Pending and Uncompleted Work to be done with your own forces.

List below the uncompleted dollar value of work for each contract and awards pending to be completed with your own forces. All work Subcontracted to others will be listed on the reverse of this form. In a joint venture, list only that portion of the work to be done by your company. If no work is contracted, show NONE.

| | | | | | | **Accumulated Totals** |
|---|---|---|---|---|---|---|
| **Earthwork** | | | | 35,000.00 | | 55,700.00 |
| **Portland Cement Concrete Paving** | | | | | | 0.00 |
| **HMA Plant Mix** | 1,327,200.00 | 437,800.00 | 449,100.00 | 713,900.00 | | 5,804,200.00 |
| **HMA Paving** | | | 14,700.00 | 26,200.00 | | 48,000.00 |
| **Clean & Seal Cracks/Joints** | | | 3,200.00 | | | 6,000.00 |
| **Aggregate Bases & Surfaces** | 16,100.00 | 4,900.00 | | 78,200.00 | | 341,800.00 |
| **Highway,R.R. and Waterway Structures** | | | | | | 0.00 |
| **Drainage** | | | 11,600.00 | 5,200.00 | | 80,900.00 |
| **Electrical** | | | | | | 0.00 |
| **Cover and Seal Coats** | 10,100.00 | 10,100.00 | | 700.00 | | 62,900.00 |
| **Concrete Construction** | | 12,200.00 | 18,500.00 | 47,600.00 | | 1,325,100.00 |
| **Landscaping** | | | | | | 0.00 |
| **Fencing** | | | | | | 0.00 |
| **Guardrail** | | | | | | 0.00 |
| **Painting** | | | | | | 0.00 |
| **Signing** | | | | | | 0.00 |
| **Cold Milling, Planning & Rotomilling** | 82,600.00 | 23,600.00 | 40,200.00 | 155,700.00 | | 625,400.00 |
| **Demolition** | | | | | | 0.00 |
| **Pavement Markings (Paint)** | | | | | | 0.00 |
| **Other Construction (List)** | | | | | | 0.00 |
| | | | | | | 0.00 |
| | | | | | | 0.00 |
| **Totals** | 1,436,000.00 | 488,600.00 | 537,300.00 | 1,062,500.00 | 0.00 | 8,350,000.00 |

Disclosure of this information is **REQUIRED** to accomplish the statutory purpose as outlined in the "Illinois Procurement Code". Failure to comply will result in non-issuance of an "Authorization To Bid." This form has been approved by the State Forms Management Center.

Illinois Department of Transportation

Bureau of Construction
2300 South Dirksen Parkway/Room 322
Springfield, Illinois 62764

# Affidavit of Availability

For the Letting of 6/21/2017
(Letting date)

**Instructions:** Complete this form by either typing or using black ink. "Authorization to Bid" will not be issued unless both sides of this form are completed in detail. Use additional forms as needed to list all work.

## Part I. Work Under Contract

List below all work you have under contract as either a prime contractor or a subcontractor. It is required to include all pending low bids not yet awarded or rejected. In a joint venture, list only that portion of the work which is the responsibility of your company. The uncompleted dollar value is to be based upon the most recent engineer's or owners estimate, and must include work subcontracted to others. If no work is contracted, show **NONE.**

| | 17 | 18 | 19 | 20 | Awards Pending | |
|---|---|---|---|---|---|---|
| Contract Number | | | | 61D04 | | |
| Contract With | NORTH AURORA | NORTH AURORA | PRIVATE | IDOT | | |
| Estimated Completion Date | 07/17 | 09/17 | 06/17 | 07/17 | | |
| Total Contract Price | 365,900.00 | 1,364,300.00 | 100,900.00 | 618,800.00 | | Accumulated Totals |
| Uncompleted Dollar Value if Firm is the Prime Contractor | 144,500.00 | | 100,900.00 | | 0.00 | 5,937,100.00 |
| Uncompleted Dollar Value if Firm is the Subcontractor | | 688,600.00 | | 591,800.00 | | 4,873,500.00 |
| | | | | Total Value of All Work | | 10,810,600.00 |

## Part II. Awards Pending and Uncompleted Work to be done with your own forces.

List below the uncompleted dollar value of work for each contract and awards pending to be completed with your own forces. All work Subcontracted to others will be listed on the reverse of this form. In a joint venture, list only that portion of the work to be done by your company. If no work is contracted, show NONE.

| | | | | | | Accumulated Totals |
|---|---|---|---|---|---|---|
| Earthwork | 1,900.00 | 24,300.00 | | | | 81,900.00 |
| Portland Cement Concrete Paving | | | | | | 0.00 |
| HMA Plant Mix | 79,000.00 | 325,500.00 | 43,800.00 | 415,400.00 | | 6,667,900.00 |
| HMA Paving | 700.00 | 2,500.00 | | 9,000.00 | | 60,200.00 |
| Clean & Seal Cracks/Joints | | | | 8,600.00 | | 14,600.00 |
| Aggregate Bases & Surfaces | 8,500.00 | 20,400.00 | 4,400.00 | | | 375,100.00 |
| Highway,R.R. and Waterway Structures | | | | | | 0.00 |
| Drainage | | 18,600.00 | | 4,400.00 | | 103,900.00 |
| Electrical | | | | | | 0.00 |
| Cover and Seal Coats | 4,500.00 | 200.00 | | 300.00 | | 67,900.00 |
| Concrete Construction | 13,900.00 | 123,900.00 | 52,700.00 | 22,200.00 | | 1,537,800.00 |
| Landscaping | | | | | | 0.00 |
| Fencing | | | | | | 0.00 |
| Guardrail | | | | | | 0.00 |
| Painting | | | | | | 0.00 |
| Signing | | | | | | 0.00 |
| Cold Milling, Planning & Rotomilling | 12,500.00 | 78,500.00 | | 69,300.00 | | 785,700.00 |
| Demolition | | | | | | 0.00 |
| Pavement Markings (Paint) | | | | | | 0.00 |
| Other Construction (List) | | | | | | 0.00 |
| | | | | | | 0.00 |
| | | | | | | 0.00 |
| Totals | 121,000.00 | 593,900.00 | 100,900.00 | 529,200.00 | 0.00 | 9,695,000.00 |

Disclosure of this information is **REQUIRED** to accomplish the statutory purpose as outlined in the "Illinois Procurement Code". Failure to comply will result in non-issuance of an "Authorization To Bid." This form has been approved by the State Forms Management Center.

# Affidavit of Availability

Illinois Department of Transportation

Bureau of Construction
2300 South Dirksen Parkway/Room 322
Springfield, Illinois 62764

For the Letting of 6/21/2017
(Letting date)

**Instructions:** Complete this form by either typing or using black ink. "Authorization to Bid" will not be issued unless both sides of this form are completed in detail. Use additional forms as needed to list all work.

## Part I. Work Under Contract

List below all work you have under contract as either a prime contractor or a subcontractor. It is required to include all pending low bids not yet awarded or rejected. In a joint venture, list only that portion of the work which is the responsibility of your company. The uncompleted dollar value is to be based upon the most recent engineer's or owners estimate, and must include work subcontracted to others. If no work is contracted, show **NONE.**

| | 21 | 22 | 23 | 24 | Awards Pending | |
|---|---|---|---|---|---|---|
| Contract Number | | | | | | |
| Contract With | AURORA UNIVERSITY | AURORA UNIVERSITY | VILLAGE OF LISLE | CITY OF AURORA | | |
| Estimated Completion Date | 09/17 | 09/17 | 08/17 | 06/17 | | |
| Total Contract Price | 291,600.00 | 186,000.00 | 1,594,200.00 | 134,800.00 | | Accumulated Totals |
| Uncompleted Dollar Value if Firm is the Prime Contractor | 291,600.00 | 186,000.00 | 1,594,200.00 | | 0.00 | 8,008,900.00 |
| Uncompleted Dollar Value if Firm is the Subcontractor | | | | 55,100.00 | | 4,928,600.00 |
| | | | | Total Value of All Work | | 12,937,500.00 |

## Part II. Awards Pending and Uncompleted Work to be done with your own forces.

List below the uncompleted dollar value of work for each contract and awards pending to be completed with your own forces. All work Subcontracted to others will be listed on the reverse of this form. In a joint venture, list only that portion of the work to be done by your company. If no work is contracted, show NONE.

| | | | | | | Accumulated Totals |
|---|---|---|---|---|---|---|
| Earthwork | | | | | | 81,900.00 |
| Portland Cement Concrete Paving | | | | | | 0.00 |
| HMA Plant Mix | | 164,500.00 | 928,900.00 | 21,900.00 | | 7,783,200.00 |
| HMA Paving | | | | | | 60,200.00 |
| Clean & Seal Cracks/Joints | | 4,100.00 | 200.00 | | | 18,900.00 |
| Aggregate Bases & Surfaces | | 8,800.00 | 41,600.00 | | | 425,500.00 |
| Highway,R.R. and Waterway Structures | | | | | | 0.00 |
| Drainage | | | 73,300.00 | | | 177,200.00 |
| Electrical | | | | | | 0.00 |
| Cover and Seal Coats | | 8,600.00 | 500.00 | | | 77,000.00 |
| Concrete Construction | 291,600.00 | | 248,300.00 | 29,600.00 | | 2,107,300.00 |
| Landscaping | | | | | | 0.00 |
| Fencing | | | | | | 0.00 |
| Guardrail | | | | | | 0.00 |
| Painting | | | | | | 0.00 |
| Signing | | | | | | 0.00 |
| Cold Milling, Planning & Rotomilling | | | 239,900.00 | 3,600.00 | | 1,029,200.00 |
| Demolition | | | | | | 0.00 |
| Pavement Markings (Paint) | | | | | | 0.00 |
| Other Construction (List) | | | | | | 0.00 |
| | | | | | | 0.00 |
| | | | | | | 0.00 |
| Totals | 291,600.00 | 186,000.00 | 1,532,700.00 | 55,100.00 | 0.00 | 11,760,400.00 |

Disclosure of this information is **REQUIRED** to accomplish the statutory purpose as outlined in the "Illinois Procurement Code". Failure to comply will result in non-issuance of an "Authorization To Bid." This form has been approved by the State Forms Management Center.

Illinois Department of Transportation
Bureau of Construction
2300 South Dirksen Parkway/Room 322
Springfield, Illinois 62764

# Affidavit of Availability

For the Letting of 6/21/2017

**Instructions:** Complete this form by either typing or using black ink. "Authorization to Bid" will not be issued unless both sides of this form are completed in detail. Use additional forms as needed to list all work.

## Part I. Work Under Contract

List below all work you have under contract as either a prime contractor or a subcontractor. It is required to include all pending low bids not yet awarded or rejected. In a joint venture, list only that portion of the work which is the responsibility of your company. The uncompleted dollar value is to be based upon the most recent engineer's or owners estimate, and must include work subcontracted to others. If no work is contracted, show **NONE.**

| | 25 | 26 | 27 | 28 | Awards Pending | |
|---|---|---|---|---|---|---|
| Contract Number | | | | | | |
| Contract With | EASD #131 | LISLE TOWNSHIP | IPSD #204 | CITY OF ST CHARLES | | |
| Estimated Completion Date | 08/17 | 10/17 | 08/17 | 10/17 | | |
| Total Contract Price | 650,800.00 | 408,800.00 | 849,000.00 | 1,375,000.00 | | Accumulated Totals |
| Uncompleted Dollar Value if Firm is the Prime Contractor | 650,800.00 | 408,800.00 | 849,000.00 | 1,375,000.00 | 0.00 | 11,292,500.00 |
| Uncompleted Dollar Value if Firm is the Subcontractor | | | | | | 4,928,600.00 |
| | | | | Total Value of All Work | | 16,221,100.00 |

## Part II. Awards Pending and Uncompleted Work to be done with your own forces.

List below the uncompleted dollar value of work for each contract and awards pending to be completed with your own forces. All work Subcontracted to others will be listed on the reverse of this form. In a joint venture, list only that portion of the work to be done by your company. If no work is contracted, show NONE.

| | | | | | | Accumulated Totals |
|---|---|---|---|---|---|---|
| Earthwork | 120,500.00 | | 28,600.00 | | | 231,000.00 |
| Portland Cement Concrete Paving | | | | | | 0.00 |
| HMA Plant Mix | 285,300.00 | 312,800.00 | 361,600.00 | 518,600.00 | | 9,261,500.00 |
| HMA Paving | | | 90,000.00 | 21,000.00 | | 171,200.00 |
| Clean & Seal Cracks/Joints | | | | | | 18,900.00 |
| Aggregate Bases & Surfaces | 23,200.00 | | 133,800.00 | 1,300.00 | | 583,800.00 |
| Highway,R.R. and Waterway Structures | | | | | | 0.00 |
| Drainage | 28,800.00 | | 49,300.00 | | | 255,300.00 |
| Electrical | | | | | | 0.00 |
| Cover and Seal Coats | | 8,100.00 | | 400.00 | | 85,500.00 |
| Concrete Construction | 141,000.00 | | 112,700.00 | 267,100.00 | | 2,628,100.00 |
| Landscaping | | | | | | 0.00 |
| Fencing | | | | | | 0.00 |
| Guardrail | | | | | | 0.00 |
| Painting | | | | | | 0.00 |
| Signing | | | | | | 0.00 |
| Cold Milling, Planning & Rotomilling | 52,000.00 | 87,900.00 | 73,000.00 | 97,000.00 | | 1,339,100.00 |
| Demolition | | | | | | 0.00 |
| Pavement Markings (Paint) | | | | | | 0.00 |
| Other Construction (List) | | | | | | 0.00 |
| | | | | | | 0.00 |
| | | | | | | 0.00 |
| Totals | 650,800.00 | 408,800.00 | 849,000.00 | 905,400.00 | 0.00 | 14,574,400.00 |

Disclosure of this information is **REQUIRED** to accomplish the statutory purpose as outlined in the "Illinois Procurement Code". Failure to comply will result in non-issuance of an "Authorization To Bid." This form has been approved by the State Forms Management Center.

Illinois Department of Transportation
Bureau of Construction
2300 South Dirksen Parkway/Room 322
Springfield, Illinois 62764

# Affidavit of Availability

For the Letting of 6/21/2017

**Instructions:** Complete this form by either typing or using black ink. "Authorization to Bid" will not be issued unless both sides of this form are completed in detail. Use additional forms as needed to list all work. )

## Part I. Work Under Contract

List below all work you have under contract as either a prime contractor or a subcontractor. It is required to include all pending low bids not yet awarded or rejected. In a joint venture, list only that portion of the work which is the responsibility of your company. The uncompleted dollar value is to be based upon the most recent engineer's or owners estimate, and must include work subcontracted to others. If no work is contracted, show **NONE.**

| | 29 | 30 | 31 | 32 | Awards Pending | |
|---|---|---|---|---|---|---|
| Contract Number | | | | | | |
| Contract With | CITY OF YORKVILLE | PRIVATE | VILLAGE OF WINFIELD | VILLAGE OF OSWEGO | | |
| Estimated Completion Date | 09/17 | 11/17 | 10/17 | 09/17 | | |
| Total Contract Price | 388,400.00 | 295,800.00 | 583,400.00 | 826,500.00 | | Accumulated Totals |
| Uncompleted Dollar Value if Firm is the Prime Contractor | 321,800.00 | | 583,400.00 | 826,500.00 | | 13,024,200.00 |
| Uncompleted Dollar Value if Firm is the Subcontractor | | 295,800.00 | | | | 5,224,400.00 |
| | | | | Total Value of All Work | | 18,248,600.00 |

## Part II. Awards Pending and Uncompleted Work to be done with your own forces.

List below the uncompleted dollar value of work for each contract and awards pending to be completed with your own forces. All work Subcontracted to others will be listed on the reverse of this form. In a joint venture, list only that portion of the work to be done by your company. If no work is contracted, show NONE.

| | | | | | | Accumulated Totals |
|---|---|---|---|---|---|---|
| Earthwork | | | 13200.0 | | | 244,200.00 |
| Portland Cement Concrete Paving | | | | | | 0.00 |
| HMA Plant Mix | 269,900.00 | 278,300.00 | 331,300.00 | 572,500.00 | | 10,713,500.00 |
| HMA Paving | | | 20,000.00 | | | 191,200.00 |
| Clean & Seal Cracks/Joints | 600.00 | | | | | 19,500.00 |
| Aggregate Bases & Surfaces | 15,300.00 | | 24,100.00 | 6,100.00 | | 629,300.00 |
| Highway,R.R. and Waterway Structures | | | | | | 0.00 |
| Drainage | | | | 13,100.00 | | 268,400.00 |
| Electrical | | | | | | 0.00 |
| Cover and Seal Coats | 200.00 | | 200.00 | 400.00 | | 86,300.00 |
| Concrete Construction | | | 78,900.00 | 122,300.00 | | 2,829,300.00 |
| Landscaping | | | | | | 0.00 |
| Fencing | | | | | | 0.00 |
| Guardrail | | | | | | 0.00 |
| Painting | | | | | | 0.00 |
| Signing | | | | | | 0.00 |
| Cold Milling, Planning & Rotomilling | 6,000.00 | 17,500.00 | 52,000.00 | 94,600.00 | | 1,509,200.00 |
| Demolition | | | | | | 0.00 |
| Pavement Markings (Paint) | | | | | | 0.00 |
| Other Construction (List) | | | | | | 0.00 |
| | | | | | | 0.00 |
| | | | | | | 0.00 |
| Totals | 292,000.00 | 295,800.00 | 519,700.00 | 809,000.00 | 0.00 | 16,490,900.00 |

Disclosure of this information is **REQUIRED** to accomplish the statutory purpose as outlined in the "Illinois Procurement Code". Failure to comply will result in non-issuance of an "Authorization To Bid." This form has been approved by the State Forms Management Center.

Illinois Department of Transportation

Bureau of Construction
2300 South Dirksen Parkway/Room 322
Springfield, Illinois 62764

# Affidavit of Availability

For the Letting of 6/21/2017

**Instructions:** Complete this form by either typing or using black ink. "Authorization to Bid" will not be issued unless both sides of this form are completed in detail. Use additional forms as needed to list all work. )

**Part I. Work Under Contract**

List below all work you have under contract as either a prime contractor or a subcontractor. It is required to include all pending low bids not yet awarded or rejected. In a joint venture, list only that portion of the work which is the responsibility of your company. The uncompleted dollar value is to be based upon the most recent engineer's or owners estimate, and must include work subcontracted to others. If no work is contracted, show **NONE.**

| | 33 | 34 | 35 | 36 | Awards Pending | |
|---|---|---|---|---|---|---|
| Contract Number | | | | | | |
| Contract With | CITY OF AURORA | PRIVATE | WEST CHICAGO | WEST CHICAGO | | |
| Estimated Completion Date | 10/17 | 06/18 | 11/17 | 11/17 | | |
| Total Contract Price | 1,080,800.00 | 828,000.00 | 297,700.00 | 264,800.00 | | Accumulated Totals |
| Uncompleted Dollar Value if Firm is the Prime Contractor | 1,080,800.00 | | 297,700.00 | 264,800.00 | | 14,667,500.00 |
| Uncompleted Dollar Value if Firm is the Subcontractor | | 828,000.00 | | | | 6,052,400.00 |
| | | | | Total Value of All Work | | 20,719,900.00 |

**Part II. Awards Pending and Uncompleted Work to be done with your own forces.**

List below the uncompleted dollar value of work for each contract and awards pending to be completed with your own forces. All work Subcontracted to others will be listed on the reverse of this form. In a joint venture, list only that portion of the work to be done by your company. If no work is contracted, show NONE.

| | | | | | | Accumulated Totals |
|---|---|---|---|---|---|---|
| Earthwork | | | 700.0 | 1,000.00 | | 245,900.00 |
| Portland Cement Concrete Paving | | | | | | 0.00 |
| HMA Plant Mix | 274,500.00 | 266,500.00 | 171,200.00 | 165,900.00 | | 11,591,600.00 |
| HMA Paving | | | | | | 191,200.00 |
| Clean & Seal Cracks/Joints | | | 2,300.00 | 2,700.00 | | 24,500.00 |
| Aggregate Bases & Surfaces | | 44,700.00 | 700.00 | 400.00 | | 675,100.00 |
| Highway,R.R. and Waterway Structures | | | | | | 0.00 |
| Drainage | 15,700.00 | | 12,500.00 | 3,800.00 | | 300,400.00 |
| Electrical | | | | | | 0.00 |
| Cover and Seal Coats | | 2,400.00 | | 100.00 | | 88,800.00 |
| Concrete Construction | 608,200.00 | 71,500.00 | 47,700.00 | 24,400.00 | | 3,581,100.00 |
| Landscaping | | | | | | 0.00 |
| Fencing | | | | | | 0.00 |
| Guardrail | | | | | | 0.00 |
| Painting | | | | | | 0.00 |
| Signing | | | | | | 0.00 |
| Cold Milling, Planning & Rotomilling | 4,400.00 | 17,800.00 | 25,100.00 | 29,000.00 | | 1,585,500.00 |
| Demolition | | | | | | 0.00 |
| Pavement Markings (Paint) | | | | | | 0.00 |
| Other Construction (List) | | | | | | 0.00 |
| | | | | | | 0.00 |
| | | | | | | 0.00 |
| Totals | 902,800.00 | 402,900.00 | 260,200.00 | 227,300.00 | 0.00 | 18,284,100.00 |

Disclosure of this information is **REQUIRED** to accomplish the statutory purpose as outlined in the "Illinois Procurement Code". Failure to comply will result in non-issuance of an "Authorization To Bid." This form has been approved by the State Forms Management Center.

Illinois Department of Transportation
Bureau of Construction
2300 South Dirksen Parkway/Room 322
Springfield, Illinois 62764

# Affidavit of Availability

**For the Letting of** 6/21/2017

**Instructions:** Complete this form by either typing or using black ink. "Authorization to Bid" will not be issued unless both sides of this form are completed in detail. Use additional forms as needed to list all work.

## Part I. Work Under Contract

List below all work you have under contract as either a prime contractor or a subcontractor. It is required to include all pending low bids not yet awarded or rejected. In a joint venture, list only that portion of the work which is the responsibility of your company. The uncompleted dollar value is to be based upon the most recent engineer's or owners estimate, and must include work subcontracted to others. If no work is contracted, show **NONE.**

| | 37 | 38 | 39 | 40 | Awards Pending | |
|---|---|---|---|---|---|---|
| **Contract Number** | | | | 62B89 | | |
| **Contract With** | PRIVATE | WOODRIDGE | GLEN ELLYN | IDOT | | |
| **Estimated Completion Date** | 11/17 | 09/17 | 10/17 | 09/17 | | |
| **Total Contract Price** | 132,400.00 | 829,600.00 | 2,002,900.00 | 1,883,000.00 | | **Accumulated Totals** |
| **Uncompleted Dollar Value if Firm is the Prime Contractor** | | 829,600.00 | 2,002,900.00 | 1,883,000.00 | | 19,383,000.00 |
| **Uncompleted Dollar Value if Firm is the Subcontractor** | 132,400.00 | | | | | 6,184,800.00 |
| | | | | **Total Value of All Work** | | 25,567,800.00 |

## Part II. Awards Pending and Uncompleted Work to be done with your own forces.

List below the uncompleted dollar value of work for each contract and awards pending to be completed with your own forces. All work Subcontracted to others will be listed on the reverse of this form. In a joint venture, list only that portion of the work to be done by your company. If no work is contracted, show NONE.

| | | | | | | **Accumulated Totals** |
|---|---|---|---|---|---|---|
| **Earthwork** | | 44500.0 | 47,600.00 | 30,000.00 | | 368,000.00 |
| **Portland Cement Concrete Paving** | | | | | | 0.00 |
| **HMA Plant Mix** | 64,800.00 | 348,800.00 | 724,500.00 | 1,006,000.00 | | 13,735,700.00 |
| **HMA Paving** | | 12,500.00 | | 119,000.00 | | 322,700.00 |
| **Clean & Seal Cracks/Joints** | | 1,900.00 | 2,500.00 | 29,300.00 | | 58,200.00 |
| **Aggregate Bases & Surfaces** | 37,100.00 | 57,000.00 | 125,800.00 | 10,000.00 | | 905,000.00 |
| **Highway,R.R. and Waterway Structures** | | | | | | 0.00 |
| **Drainage** | | | | | | 300,400.00 |
| **Electrical** | | | | | | 0.00 |
| **Cover and Seal Coats** | 1,400.00 | 300.00 | 600.00 | 600.00 | | 91,700.00 |
| **Concrete Construction** | 29,100.00 | 185,200.00 | 519,700.00 | 221,200.00 | | 4,536,300.00 |
| **Landscaping** | | | | | | 0.00 |
| **Fencing** | | | | | | 0.00 |
| **Guardrail** | | | | | | 0.00 |
| **Painting** | | | | | | 0.00 |
| **Signing** | | | | | | 0.00 |
| **Cold Milling, Planning & Rotomilling** | | 97,000.00 | 168,800.00 | 202,700.00 | | 2,054,000.00 |
| **Demolition** | | | | | | 0.00 |
| **Pavement Markings (Paint)** | | | | | | 0.00 |
| **Other Construction (List)** | | | | | | 0.00 |
| | | | | | | 0.00 |
| | | | | | | 0.00 |
| **Totals** | 132,400.00 | 747,200.00 | 1,589,500.00 | 1,618,800.00 | 0.00 | 22,372,000.00 |

Disclosure of this information is **REQUIRED** to accomplish the statutory purpose as outlined in the "Illinois Procurement Code". Failure to comply will result in non-issuance of an "Authorization To Bid." This form has been approved by the State Forms Management Center.

**Part III. Work Subcontracted to Others**

For each contract described in Part I, list all the work you have subcontracted to others.

| | 1 | 2 | 3 | 4 | Awards Pending |
|---|---|---|---|---|---|
| Subcontractor | MSL | HAWK ENT. | WORK ZONE SAFETY | D2K | |
| Type of Work | LANDSCAPING | DETECTOR LOOP | TRAFFIC CONTROL | STRIPING | |
| Subcontract Price | 30,600.00 | 4,400.00 | 3,200.00 | 17,900.00 | |
| Amount Uncompleted | 30,600.00 | 4,400.00 | 3,200.00 | 17,900.00 | |
| Subcontractor | HOME TOWNE ELECTRIC | HIGHWAY SAFETY | | HIGHWAY SAFETY | |
| Type of Work | ELECTRICAL | TRAFFIC CONTROL | | TRAFFIC CONTROL | |
| Subcontract Price | 69,200.00 | 6,000.00 | | 9,000.00 | |
| Amount Uncompleted | 69,200.00 | 6,000.00 | | 9,000.00 | |
| Subcontractor | STETNER | JE LANDWORKS | | JE LANDWORKS | |
| Type of Work | LAYOUT | LANDSCAPING | | LANDSCAPING | |
| Subcontract Price | 5,300.00 | 52,800.00 | | 36,200.00 | |
| Amount Uncompleted | 5,300.00 | 52,800.00 | | 36,200.00 | |
| Subcontractor | PRECISION PAVEMENT MARKINGS | REMPE SHARPE | | | |
| Type of Work | STRIPING | LAYOUT | | | |
| Subcontract Price | 13,100.00 | 4,400.00 | | | |
| Amount Uncompleted | 13,100.00 | 4,400.00 | | | |
| Subcontractor | TRAFFIC CONTROL & PROTECTION | SUPERIOR ROAD STRIPING | | | |
| Type of Work | TRAFFIC CONTROL | STRIPING | | | |
| Subcontract Price | 14,300.00 | 18,600.00 | | | |
| Amount Uncompleted | 14,300.00 | 18,600.00 | | | |
| Subcontractor | | SCORPIO CONST. | | | |
| Type of Work | | UNDERGROUND | | | |
| Subcontract Price | | 155,200.00 | | | |
| Amount Uncompleted | | 155,200.00 | | | |
| Subcontractor | | | | | |
| Type of Work | | | | | |
| Subcontract Price | | | | | |
| Amount Uncompleted | | | | | |
| Total Uncompleted | 132,500.00 | 241,400.00 | 3,200.00 | 63,100.00 | 0.00 |

I, being duly sworn, do hereby declare this affidavit is a true and correct statement relating to ALL uncompleted contracts of the undersigned for Federal, State, County, City and private work, including ALL subcontract work, ALL pending low bids not yet awarded or rejected and ALL estimated completion dates

Subscribed and sworn to before me

this 21st Day of June , 2017

Type or Print Name Cass W. Price Vice President

Officer or Director Title

Notary Public

Signed

My commission expires:

Company GENEVA CONSTRUCTION COMPANY

(Notary Seal)

Address P.O. BOX 998 , AURORA, IL. 60507

**Part III. Work Subcontracted to Others**

For each contract described in Part I, list all the work you have subcontracted to others.

| | 5 | 6 | 7 | 8 | |
|---|---|---|---|---|---|
| Subcontractor | | JE LANDWORKS | | | |
| Type of Work | | RESTORATION | | | |
| Subcontract Price | | 9,300.00 | | | |
| Amount Uncompleted | | 9,300.00 | | | |
| Subcontractor | | SCORPIO CONST. | | | |
| Type of Work | | UNDERGROUND | | | |
| Subcontract Price | | 90,200.00 | | | |
| Amount Uncompleted | | 14,200.00 | | | |
| Subcontractor | | THOM GRAVEL & EXCAVATION | | | |
| Type of Work | | EXCAVATION | | | |
| Subcontract Price | | 145,200.00 | | | |
| Amount Uncompleted | | 145,200.00 | | | |
| Subcontractor | | WORK ZONE SAFETY | | | |
| Type of Work | | TRAFFIC CONTROL | | | |
| Subcontract Price | | 5,900.00 | | | |
| Amount Uncompleted | | 4,900.00 | | | |
| Subcontractor | | PRECISION PAVEMENT MARKING | | | |
| Type of Work | | STRIPING | | | |
| Subcontract Price | | 4,200.00 | | | |
| Amount Uncompleted | | 2,300.00 | | | |
| Subcontractor | | | | | |
| Type of Work | | | | | |
| Subcontract Price | | | | | |
| Amount Uncompleted | | | | | |
| Subcontractor | | | | | |
| Type of Work | | | | | |
| Subcontract Price | | | | | |
| Amount Uncompleted | | | | | |
| Total Uncompleted | 0.00 | 175,900.00 | 0.00 | 0.00 | 0.00 |

I, being duly sworn, do hereby declare this affidavit is a true and correct statement relating to ALL uncompleted contracts of the undersigned for Federal, State, County, City and private work, including ALL subcontract work, ALL pending low bids not yet awarded or rejected and ALL estimated completion dates

Subscribed and sworn to before me

this 21st Day of June , 2017

Type or Print Name Cass W. Price Vice President

Officer or Director Title

Notary Public

Signed

My commission expires:

Company GENEVA CONSTRUCTION COMPANY

(Notary Seal)

Address P.O. BOX 998 , AURORA, IL. 60507

**Part III. Work Subcontracted to Others**

For each contract described in Part I, list all the work you have subcontracted to others.

| | 9 | 10 | 11 | 12 | Awards Pending |
|---|---|---|---|---|---|
| Subcontractor | | | | | |
| Type of Work | | | | | |
| Subcontract Price | | | | | |
| Amount Uncompleted | | | | | |
| Subcontractor | | | | | |
| Type of Work | | | | | |
| Subcontract Price | | | | | |
| Amount Uncompleted | | | | | |
| Subcontractor | | | | | |
| Type of Work | | | | | |
| Subcontract Price | | | | | |
| Amount Uncompleted | | | | | |
| Subcontractor | | | | | |
| Type of Work | | | | | |
| Subcontract Price | | | | | |
| Amount Uncompleted | | | | | |
| Subcontractor | | | | | |
| Type of Work | | | | | |
| Subcontract Price | | | | | |
| Amount Uncompleted | | | | | |
| Subcontractor | | | | | |
| Type of Work | | | | | |
| Subcontract Price | | | | | |
| Amount Uncompleted | | | | | |
| Subcontractor | | | | | |
| Type of Work | | | | | |
| Subcontract Price | | | | | |
| Amount Uncompleted | | | | | |
| Total Uncompleted | 0.00 | 0.00 | 0.00 | 0.00 | 0.00 |

I, being duly sworn, do hereby declare this affidavit is a true and correct statement relating to ALL uncompleted contracts of the undersigned for Federal, State, County, City and private work, including ALL subcontract work, ALL pending low bids not yet awarded or rejected and ALL estimated completion dates

Subscribed and sworn to before me

this 21st Day of June , 2017

Type or Print Name Cass W. Price Vice President

Officer or Director Title

Notary Public

Signed

My commission expires:

Company GENEVA CONSTRUCTION COMPANY

(Notary Seal)

Address P.O. BOX 998 , AURORA, IL. 60507

**Part III. Work Subcontracted to Others**

For each contract described in Part I, list all the work you have subcontracted to others.

| | 13 | 14 | 15 | 16 | Awards Pending |
|---|---|---|---|---|---|
| Subcontractor | | | HAWK ENTERPRISES | ELMHURST CHICAGO STONE | |
| Type of Work | | | ELECTRICAL | CONCRETE | |
| Subcontract Price | | | 39,400.00 | 67,900.00 | |
| Amount Uncompleted | | | 39,400.00 | 67,900.00 | |
| Subcontractor | | | HIGHWAY SAFETY | ACQUA | |
| Type of Work | | | TRAFFIC CONTROL | UNDERGROUND | |
| Subcontract Price | | | 5,300.00 | 160,400.00 | |
| Amount Uncompleted | | | 5,300.00 | 24,800.00 | |
| Subcontractor | | | MARK-IT | D2K | |
| Type of Work | | | STRIPING | PAVEMENT MARKINGS | |
| Subcontract Price | | | 11,100.00 | 40,600.00 | |
| Amount Uncompleted | | | 11,100.00 | 40,600.00 | |
| Subcontractor | | | PROTACK | LANDSCAPE BY GARY WEISS | |
| Type of Work | | | TACK COAT | LANDSCAPING | |
| Subcontract Price | | | 3,500.00 | 33,600.00 | |
| Amount Uncompleted | | | 3,500.00 | 33,600.00 | |
| Subcontractor | | | | JG DEMO | |
| Type of Work | | | | CURB & GUTTER | |
| Subcontract Price | | | | 117,300.00 | |
| Amount Uncompleted | | | | 81,300.00 | |
| Subcontractor | | | | HAWK ENTERPRISES | |
| Type of Work | | | | ELECTRICAL | |
| Subcontract Price | | | | 5,400.00 | |
| Amount Uncompleted | | | | 5,400.00 | |
| Subcontractor | | | | GEOMAT INC | |
| Type of Work | | | | FABRIC | |
| Subcontract Price | | | | 5,800.00 | |
| Amount Uncompleted | | | | 5800.0 | |
| Total Uncompleted | 0.00 | 0.00 | 59,300.00 | 259,400.00 | 0.00 |

I, being duly sworn, do hereby declare this affidavit is a true and correct statement relating to ALL uncompleted contracts of the undersigned for Federal, State, County, City and private work, including ALL subcontract work, ALL pending low bids not yet awarded or rejected and ALL estimated completion dates

Subscribed and sworn to before me

this 21st Day of June , 2017

Type or Print Name Cass W. Price Vice President

Officer or Director Title

Notary Public

Signed

My commission expires:

Company GENEVA CONSTRUCTION COMPANY

(Notary Seal)

Address P.O. BOX 998 , AURORA, IL. 60507

**Part III. Work Subcontracted to Others**

For each contract described in Part I, list all the work you have subcontracted to others.

| | 17 | 18 | 19 | 20 | Awards Pending |
|---|---|---|---|---|---|
| Subcontractor | JE LANDWORKS | GEOMAT INC | | HAWK ENTERPRISES | |
| Type of Work | LANDSCAPING | STRIP REFL CRACK CONTROL | | DETECTOR LOOPS | |
| Subcontract Price | 9,200.00 | 22,000.00 | | 27,900.00 | |
| Amount Uncompleted | 9,200.00 | 10,000.00 | | 27,900.00 | |
| Subcontractor | J&S CONSTRUCTION | HIGHWAY SAFETY | | HIGHWAY SAFETY | |
| Type of Work | UNDERGROUND | TRAFFIC CONTROL | | TRAFFIC CONTROL | |
| Subcontract Price | 85,800.00 | 12,000.00 | | 3,500.00 | |
| Amount Uncompleted | | 12,000.00 | | 3,500.00 | |
| Subcontractor | VIRGIL COOK & SON | JE LANDWORKS | | PRECISION PAVEMENT MARKING | |
| Type of Work | ELECTRICAL | LANDSCAPING | | STRIPING | |
| Subcontract Price | 8,400.00 | 45,900.00 | | 25,300.00 | |
| Amount Uncompleted | 8,400.00 | 41,100.00 | | 25,300.00 | |
| Subcontractor | MARKIT | J&S CONSTRUCTION | | LANDMARK | |
| Type of Work | STRIPING | UNDERGROUND | | LAYOUT | |
| Subcontract Price | 4,200.00 | 88,800.00 | | 3,100.00 | |
| Amount Uncompleted | 4,200.00 | 26,100.00 | | 3,100.00 | |
| Subcontractor | WORK ZONE SAFETY | TRAFFIC CONTROL & PROTECTION | | ROZCO | |
| Type of Work | TRAFFIC CONTROL | STRIPING | | LANDSCAPING | |
| Subcontract Price | 6,300.00 | 16,300.00 | | 2,800.00 | |
| Amount Uncompleted | 1,700.00 | 5,500.00 | | 2,800.00 | |
| Subcontractor | | | | | |
| Type of Work | | | | | |
| Subcontract Price | | | | | |
| Amount Uncompleted | | | | | |
| Subcontractor | | | | | |
| Type of Work | | | | | |
| Subcontract Price | | | | | |
| Amount Uncompleted | | | | | |
| Total Uncompleted | 23,500.00 | 94,700.00 | 0.00 | 62,600.00 | 0.00 |

I, being duly sworn, do hereby declare this affidavit is a true and correct statement relating to ALL uncompleted contracts of the undersigned for Federal, State, County, City and private work, including ALL subcontract work, ALL pending low bids not yet awarded or rejected and ALL estimated completion dates

Subscribed and sworn to before me

this 21st Day of June , 2017

Type or Print Name Cass W. Price — Vice President

Officer or Director — Title

Notary Public

Signed

My commission expires:

Company GENEVA CONSTRUCTION COMPANY

(Notary Seal)

Address P.O. BOX 998 , AURORA, IL. 60507

**Part III. Work Subcontracted to Others**

For each contract described in Part I, list all the work you have subcontracted to others.

| | 21 | 22 | 23 | 24 | Awards Pending |
|---|---|---|---|---|---|
| Subcontractor | | | AC PAVEMENT STRIPING | | |
| Type of Work | | | STRIPING | | |
| Subcontract Price | | | 12,800.00 | | |
| Amount Uncompleted | | | 12,800.00 | | |
| Subcontractor | | | JE LANDWORKS | | |
| Type of Work | | | LANSCAPING | | |
| Subcontract Price | | | 15,700.00 | | |
| Amount Uncompleted | | | 15,700.00 | | |
| Subcontractor | | | NAFISCO | | |
| Type of Work | | | TRAFFIC CONTROL | | |
| Subcontract Price | | | 33,000.00 | | |
| Amount Uncompleted | | | 33,000.00 | | |
| Subcontractor | | | | | |
| Type of Work | | | | | |
| Subcontract Price | | | | | |
| Amount Uncompleted | | | | | |
| Subcontractor | | | | | |
| Type of Work | | | | | |
| Subcontract Price | | | | | |
| Amount Uncompleted | | | | | |
| Subcontractor | | | | | |
| Type of Work | | | | | |
| Subcontract Price | | | | | |
| Amount Uncompleted | | | | | |
| Subcontractor | | | | | |
| Type of Work | | | | | |
| Subcontract Price | | | | | |
| Amount Uncompleted | | | | | |
| Total Uncompleted | 0.00 | 0.00 | 61,500.00 | 0.00 | 0.00 |

I, being duly sworn, do hereby declare this affidavit is a true and correct statement relating to ALL uncompleted contracts of the undersigned for Federal, State, County, City and private work, including ALL subcontract work, ALL pending low bids not yet awarded or rejected and ALL estimated completion dates

Subscribed and sworn to before me

this 21st Day of June , 2017

Type or Print Name Cass W. Price — Officer or Director

Vice President — Title

Notary Public

Signed

My commission expires:

Company GENEVA CONSTRUCTION COMPANY

(Notary Seal)

Address P.O. BOX 998 , AURORA, IL. 60507

**Part III. Work Subcontracted to Others**

For each contract described in Part I, list all the work you have subcontracted to others.

| | 25 | 26 | 27 | 28 | Awards Pending |
|---|---|---|---|---|---|
| Subcontractor | | | | MAINTENANCE COATINGS | |
| Type of Work | | | | STRIPING | |
| Subcontract Price | | | | 3,200.00 | |
| Amount Uncompleted | | | | 3,200.00 | |
| Subcontractor | | | | GEOMAT | |
| Type of Work | | | | ARCC | |
| Subcontract Price | | | | 32,800.00 | |
| Amount Uncompleted | | | | 32800 | |
| Subcontractor | | | | HIGHWAY SAFETY | |
| Type of Work | | | | TRAFFIC CONTROL | |
| Subcontract Price | | | | 8,000.00 | |
| Amount Uncompleted | | | | 8,000.00 | |
| Subcontractor | | | | JE LANDWORKS | |
| Type of Work | | | | RESTORATION | |
| Subcontract Price | | | | 19,700.00 | |
| Amount Uncompleted | | | | 19,700.00 | |
| Subcontractor | | | | SWALLOW CONSTRUCTION | |
| Type of Work | | | | UNDERGROUND | |
| Subcontract Price | | | | 405,900.00 | |
| Amount Uncompleted | | | | 405,900.00 | |
| Subcontractor | | | | | |
| Type of Work | | | | | |
| Subcontract Price | | | | | |
| Amount Uncompleted | | | | | |
| Subcontractor | | | | | |
| Type of Work | | | | | |
| Subcontract Price | | | | | |
| Amount Uncompleted | | | | | |
| Total Uncompleted | 0.00 | 0.00 | 0.00 | 469,600.00 | 0.00 |

I, being duly sworn, do hereby declare this affidavit is a true and correct statement relating to ALL uncompleted contracts of the undersigned for Federal, State, County, City and private work, including ALL subcontract work, ALL pending low bids not yet awarded or rejected and ALL estimated completion dates

Subscribed and sworn to before me

this 21st Day of June , 2017

Type or Print Name Cass W. Price Vice President

Officer or Director Title

Notary Public

Signed

My commission expires:

Company GENEVA CONSTRUCTION COMPANY

(Notary Seal)

Address P.O. BOX 998 , AURORA, IL. 60507

**Part III. Work Subcontracted to Others**

For each contract described in Part I, list all the work you have subcontracted to others.

| | 29 | 30 | 31 | 32 | Awards Pending |
|---|---|---|---|---|---|
| Subcontractor | MAINTENANCE COATINGS | | HOME TOWNE ELECTRIC | HIGHWAY SAFETY | |
| Type of Work | STRIPING | | ELECTRICAL | TRAFFIC CONTROL | |
| Subcontract Price | 19,000.00 | | 14,500.00 | 6,300.00 | |
| Amount Uncompleted | 19,000.00 | | 14,500.00 | 6,300.00 | |
| Subcontractor | JE LANDWORKS | | ARCHON | JE LANDWORKS | |
| Type of Work | RESTORATION | | UNDERGROUND | RESTORATION | |
| Subcontract Price | 5,900.00 | | 13,300.00 | 8,000.00 | |
| Amount Uncompleted | 5,900.00 | | 13,300.00 | 8,000.00 | |
| Subcontractor | NAFISCO INC | | HIGHWAY SAFETY | MAINTENANCE COATINGS | |
| Type of Work | TRAFFIC CONTROL | | TRAFFIC CONTROL | STRIPING | |
| Subcontract Price | 4,900.00 | | 7,000.00 | 3,200.00 | |
| Amount Uncompleted | 4,900.00 | | 7,000.00 | 3,200.00 | |
| Subcontractor | | | JE LANDWORKS | | |
| Type of Work | | | RESTORATION | | |
| Subcontract Price | | | 23,100.00 | | |
| Amount Uncompleted | | | 23,100.00 | | |
| Subcontractor | | | MARK-IT | | |
| Type of Work | | | STRIPING | | |
| Subcontract Price | | | 5,800.00 | | |
| Amount Uncompleted | | | 5,800.00 | | |
| Subcontractor | | | | | |
| Type of Work | | | | | |
| Subcontract Price | | | | | |
| Amount Uncompleted | | | | | |
| Subcontractor | | | | | |
| Type of Work | | | | | |
| Subcontract Price | | | | | |
| Amount Uncompleted | | | | | |
| Total Uncompleted | 29,800.00 | 0.00 | 63,700.00 | 17,500.00 | 0.00 |

I, being duly sworn, do hereby declare this affidavit is a true and correct statement relating to ALL uncompleted contracts of the undersigned for Federal, State, County, City and private work, including ALL subcontract work, ALL pending low bids not yet awarded or rejected and ALL estimated completion dates

Subscribed and sworn to before me

this 21st Day of June , 2017

Type or Print Name Cass W. Price Vice President

Officer or Director Title

Notary Public

Signed

My commission expires:

Company GENEVA CONSTRUCTION COMPANY

(Notary Seal)

Address P.O. BOX 998 , AURORA, IL. 60507

**Part III. Work Subcontracted to Others**

For each contract described in Part I, list all the work you have subcontracted to others.

| | 33 | 34 | 35 | 36 | Awards Pending |
|---|---|---|---|---|---|
| Subcontractor | FREEHILL | SUPERIOR ROAD STRIPING | HIGHWAY SAFETY | HIGHWAY SAFETY | |
| Type of Work | CRACK FILL | STRIPING | TRAFFIC CONTROL | TRAFFIC CONTROL | |
| Subcontract Price | 129,000.00 | 7,500.00 | 5,100.00 | 5,100.00 | |
| Amount Uncompleted | 129,000.00 | 7,500.00 | 5,100.00 | 5,100.00 | |
| Subcontractor | JE LANDWORKS | JE LANDWORKS | JE LANDWORKS | JE LANDWORKS | |
| Type of Work | RESTORATION | RESTORATION | RESTORATION | RESTORATION | |
| Subcontract Price | 38,500.00 | 25,000.00 | 2,600.00 | 2,600.00 | |
| Amount Uncompleted | 38,500.00 | 25,000.00 | 2,600.00 | 2,600.00 | |
| Subcontractor | TRAFFIC CONTROL & PROTECTION | JAMES LORD | PRECISION PAVEMENT MARKING | PRECISION PAVEMENT MARKING | |
| Type of Work | TRAFFIC CONTROL | SILT FENCE | STRIPING | STRIPING | |
| Subcontract Price | 10,500.00 | 8,700.00 | 2,500.00 | 2,500.00 | |
| Amount Uncompleted | 10,500.00 | 8,700.00 | 2,500.00 | 2,500.00 | |
| Subcontractor | | ROAD FABRICS | ROAD FABRICS | ROAD FABRICS | |
| Type of Work | | SRCC | ARCC | ARCC | |
| Subcontract Price | | 3,900.00 | 27,300.00 | 27,300.00 | |
| Amount Uncompleted | | 3,900.00 | 27,300.00 | 27,300.00 | |
| Subcontractor | | S&K EXCAVATING | | | |
| Type of Work | | UNDERGROUND | | | |
| Subcontract Price | | 329,000.00 | | | |
| Amount Uncompleted | | 329,000.00 | | | |
| Subcontractor | | VIRGIL COOK | | | |
| Type of Work | | STREET LIGHTS | | | |
| Subcontract Price | | 37,500.00 | | | |
| Amount Uncompleted | | 37,500.00 | | | |
| Subcontractor | | WORK ZONE SAFETY | | | |
| Type of Work | | TRAFFIC CONTROL | | | |
| Subcontract Price | | 13,500.00 | | | |
| Amount Uncompleted | | 13,500.00 | | | |
| Total Uncompleted | 178,000.00 | 425,100.00 | 37,500.00 | 37,500.00 | 0.00 |

I, being duly sworn, do hereby declare this affidavit is a true and correct statement relating to ALL uncompleted contracts of the undersigned for Federal, State, County, City and private work, including ALL subcontract work, ALL pending low bids not yet awarded or rejected and ALL estimated completion dates

Subscribed and sworn to before me

this 21st Day of June , 2017

Type or Print Name Cass W. Price Vice President

Officer or Director Title

Notary Public

Signed

My commission expires:

Company GENEVA CONSTRUCTION COMPANY

(Notary Seal)

Address P.O. BOX 998 , AURORA, IL. 60507

**Part III. Work Subcontracted to Others**

For each contract described in Part I, list all the work you have subcontracted to others.

| | 37 | 38 | 39 | 40 | Awards Pending |
|---|---|---|---|---|---|
| Subcontractor | | D2K | JE LANDWORKS | HOME TOWNE ELECTRIC | |
| Type of Work | | STRIPING & SIGNS | RESTORATION | ELECTRICAL | |
| Subcontract Price | | 17,500.00 | 151,600.00 | 52,300.00 | |
| Amount Uncompleted | | 17,500.00 | 151,600.00 | 52,300.00 | |
| Subcontractor | | GALAXY | H&H ELECTRIC | GALAXY | |
| Type of Work | | UNDERGROUND | DETECTOR LOOP | UNDERGROUND | |
| Subcontract Price | | 36,900.00 | 3,800.00 | 87,600.00 | |
| Amount Uncompleted | | 36,900.00 | 3,800.00 | 87,600.00 | |
| Subcontractor | | MSL | JOHN NERI | REMPE SHARPE | |
| Type of Work | | RESTORATION | UNDERGROUND | LAYOUT | |
| Subcontract Price | | 23,700.00 | 210,300.00 | 5,400.00 | |
| Amount Uncompleted | | 23,700.00 | 210,300.00 | 5,400.00 | |
| Subcontractor | | REMPE SHARPE | NAFISCO INC | CSD | |
| Type of Work | | LAYOUT | TRAFFIC CONTROL | SOIL TESTING | |
| Subcontract Price | | 4,300.00 | 15,900.00 | 26,000.00 | |
| Amount Uncompleted | | 4,300.00 | 15,900.00 | 26,000.00 | |
| Subcontractor | | | MAINTENANCE COATINGS | D2K | |
| Type of Work | | | STRIPING | STRIPING & TRAFFIC CONTROL | |
| Subcontract Price | | | 5,200.00 | 84,200.00 | |
| Amount Uncompleted | | | 5,200.00 | 84,200.00 | |
| Subcontractor | | | STETTNER | MSL | |
| Type of Work | | | LAYOUT | RESTORATION | |
| Subcontract Price | | | 6,000.00 | 8,700.00 | |
| Amount Uncompleted | | | 6,000.00 | 8,700.00 | |
| Subcontractor | | | STEVE PIPER | | |
| Type of Work | | | TREE REMOVAL | | |
| Subcontract Price | | | 20,600.00 | | |
| Amount Uncompleted | | | 20,600.00 | | |
| Total Uncompleted | 0.00 | 82,400.00 | 413,400.00 | 264,200.00 | 0.00 |

I, being duly sworn, do hereby declare this affidavit is a true and correct statement relating to ALL uncompleted contracts of the undersigned for Federal, State, County, City and private work, including ALL subcontract work, ALL pending low bids not yet awarded or rejected and ALL estimated completion dates

Subscribed and sworn to before me

this 21st Day of June 2017

Jessica Tosaw

Notary Public

My commission expires: 10/01/19

(Notary Seal) OFFICIAL SEAL
JESSICA M TOSAW
NOTARY PUBLIC - STATE OF ILLINOIS
MY COMMISSION EXPIRES:10/01/19

Type or Print Name Cass W. Price — Vice President

Officer or Director — Title

Signed

Company GENEVA CONSTRUCTION COMPANY

Address P.O. BOX 998 , AURORA, IL. 60507

# Village of Downers Grove
## Contractor Evaluation

Contractor: Geneva Construction Company

Projects: 2016 Resurfacing (A) and 2016 Resurfacing (B)

Primary Contact: Kurt Roth  Phone:  (630) 256-0364

Time Period: May 2016 to December 2016

On Schedule (allowing for uncontrollable circumstances)  ☒ Yes ☐ No

Provide details if early or late completion:  Time extension pending for Project (A) due to additional scope of work on Warren Ave / Parking Lot F. Utilizing same superintendent, Contractor progresses into Project (B) and all substantially complete by completion date.

Change Orders (attach information if needed): CO will be processed for time extension noted above and for final quantity balancing. Both projects under original bid amounts.

Difficulties / Positives: Good ongoing communication with field and office personnel. Generally conscientious regarding specs / workmanship.

Interaction with public:

☐ Excellent ☒ Good ☐ Average ☐ Poor

(Attach information on any complaints or compliments)

General Level of Satisfaction with work:

☐ Well Satisfied ☒ Satisfied ☐ Not Satisfied

Reviewers: Scott Barr

Date: 1/30/17

2017 ROADWAY MAINTENANCE PROGRAM
STREETS ESTIMATED TO BE RESURFACED
STREET RESURFACING CONTRACT B

6/7/17

| STREET | FROM | TO |
|---|---|---|
| 67TH ST | DUNHAM RD | SARATOGA AVE |
| 68TH ST | DUNHAM RD | SARATOGA AVE |
| 71ST TERRACE | CUL DE SAC | 71ST ST |
| 73RD ST | BLACKBURN AVE | FAIRVIEW WEST |
| 74TH ST | GRAND AVE | FAIRVIEW WEST |
| 75TH ST | BLACKBURN AVE | GRAND AVE |
| BAKER CT | CUL DE SAC | SPRINGSIDE AVE |
| BLACKBURN AVE | 75TH ST | 73RD ST |
| DEXTER RD | S. OF RICHARDS AVE | 71ST ST |
| FAIRVIEW WEST | 74TH ST | 73RD ST |
| FLORENCE AVE | 75TH FRONTAGE | S. LIMITS |
| GRAND AVE | 73RD ST | 75TH ST |
| KELLY PL | CUL DE SAC | RICHARDS AVE |
| MATTHIAS RD | STANFORD AVE | S. END |
| RICHARDS AVE | SPRINGSIDE AVE | DEXTER RD |
| SARATOGA AVE | 67TH ST | S. OF 68TH ST |
| SPRINGSIDE AVE | RICHARDS AVE | DEXTER RD |
| STANFORD | DUNHAM RD. | MATTHIAS RD |
| TERRACE DR | CUL DE SAC | 71ST ST |
| WILLARD PL | CUL DE SAC | DEXTER RD |