Village of Downers Grove

Report for the Village Council Meeting

Table 1 - Council Agenda item.

Subject	Zoning Ordinance Updates - 2026
Submitted By	Stan Popovich, AICP Director of Community Development

Synopsis

The Village is proposing amendments to the Zoning Ordinance that will implement recommendations from the Guiding DG Comprehensive Plan, Active Transportation Plan and Environmental Sustainability Plan.

Strategic Plan Alignment

The goals for 2025-2027 Strategic Plan include *Steward of Financial, Environmental, and Neighborhood Sustainability, Exceptional Municipal Services, Strong, Diverse Local Economy, a Safe and Welcoming Community, a Beautiful Community and Continual Innovation*. Updating the Zoning Ordinance and amending the Sign Ordinance to allow digital signs are priority action items.

Fiscal Impact

N/A

Recommendation

Discussion on the proposed amendments.

Background

In 2025, the Village adopted the Guiding DG plans, including the Active Transportation Plan, the Comprehensive Plan, and the Environmental Sustainability Plan. The Comprehensive Plan included an implementation chapter that identified updating the Zoning, Building and Subdivision Ordinance as a key item to be completed. The Zoning Ordinance is the primary regulatory tool that is used to implement the vision of the Guiding DG plans.

The proposed updates and amendments to the Zoning Ordinance are a result of community input through the Guiding DG public participation process, the adoption of the Guiding DG plans and continued discussions at public meetings over the past year.

The proposed amendments fall into the following main topics:

- Environmental
- Parking
- Digital Signs
- Housing
- Land Uses
- Minor Clarifications and Modifications

Schedule

The Village has conducted a variety of meetings since the beginning of 2026 to review the proposed text amendments.

Table 2 – Previous Zoning Ordinance Discussions

Date	Board or Commission	Topic	Agenda Link	Minutes Link
January 6, 2026	Village Council	Introduction	Agenda	Minutes
February 2, 2026	Planning and Zoning Commission	Introduction	Agenda	Minutes
April 6, 2026	Planning and Zoning Commission	Environmental	Agenda	Minutes
June 1, 2026	Planning and Zoning Commission	Parking and Minor Clarifications and Modifications	Agenda	Minutes
July 21, 2026	Village Council	Digital Signs and Housing	Agenda	Minutes
September 15, 2026	Village Council	Housing	Agenda	Minutes
October 5, 2026	Planning and Zoning Commission	Digital Signs, Housing, and Land Uses	Agenda	Minutes
November 2, 2026	Planning and Zoning Commission	Public Hearing on all proposed amendments	Agenda	Draft Minutes (attached)

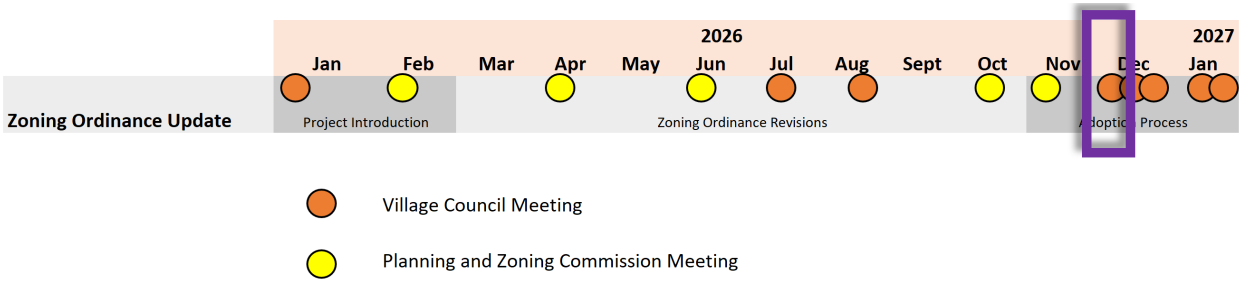

The anticipated Council consideration of the proposed amendments will be completed over multiple meetings as shown below.

2026			2027		
Dec 1	**Dec 8**	**Dec 15**	**Jan 5**	**Jan 12**	**Jan 19**
Introduction & Housing	Environmental	Uses & Parking, and Digital Signs		Minor Modifications	Active Agenda
	Tree Regulations			Subdivision Ordinance	

Attachments

- Ordinance
- Staff Report with attachments dated November 2, 2026
- Draft Planning and Zoning Commission Minutes dated November 2, 2026

Ordinance

An Ordinance Amending Certain Zoning Ordinance Provisions

BE IT ORDAINED by the Village Council of the Village of Downers Grove in DuPage County, Illinois, as follows: (Additions are indicated by blue/underlined; deletions by ~~blue/strikeout~~):

SECTION 1. That Section 28.2.030 of the Zoning Ordinance is hereby amended to read as follows:

Sec 28.2.030 Lot And Building Regulations.

The lot and building regulations of Table 2-2 apply to all principal uses and structures in R districts, except as otherwise expressly stated in this zoning ordinance. General exceptions to lot and building regulations and rules for measuring compliance can be found in Article XIV of this Chapter. Additional regulations governing accessory uses and structures can be found in DGMC Section 28.6.010. See also Figure 2-1. Additional regulations governing non-conforming lots can be found in DGMC Section 28.11.020.

Table 2-2: R District Lot and Building Regulations

	Regulations	R-1	R-2	R-3	R-4	R-5	R5-A	R-6
	Minimum District Area (square feet)	20,000	15,000	10,500	7,500	87,120	87,120	87,120
L_1	Minimum Lot Area (square feet)							
	Detached house	20,000	15,000	10,500	7,500	7,500	7,500	7,500
	Attached house (applies to development not individual units)	20,000 [5]	15,000 [5]	10,500 [5]	7,500 [5]	~~8,000~~ 7,500	~~8,000~~ 7,500	~~10,500~~ 7,500

	Two-unit house	20,000 [5]	15,000 [5]	10,500 [5]	7,500 [5]	~~10,500~~ 7,500	~~10,500~~ 7,500	~~10,500~~ 7,500
	Apartment/condo	-	-	-	-	-	-	~~10,500~~ 7,500
	Other buildings/uses	20,000	15,000	10,500	7,500	10,500	10,500	10,500
	Minimum Lot Area per Dwelling Unit (square feet)							
	Detached house	20,000	15,000	10,500	7,500	7,500	7,500	7,500
	Attached house	6,667 [5]	5,000 [5]	3,500 [5]	2,500 [5]	~~4,000~~ 2,500	~~4,000~~ 2,500	2,500
	Two-unit house	10,000 [5]	7,500 [5]	5,250 [5]	3,750 [5]	~~5,250~~ 3,750	~~5,250~~ 3,750	~~5,250~~ 3,750
	Apartment/condo	-	-	-	-	-	-	1,000
	Other buildings/uses	-	-	-	-	-	-	-
L_2	Minimum Lot Width (feet)							
	Detached house	100	85	75	50	50	50	50
	Attached house [1]	100 [5]	85 [5]	75 [5]	50 [5]	~~80~~ 50	~~80~~ 50	~~80~~ 50
	Two-unit house	100 [5]	85 [5]	75 [5]	50 [5]	~~80~~ 50	~~80~~ 50	~~80~~ 50
	Apartment/condo	-	-	-	-	-	-	~~80~~ 50
	Other buildings/uses	100	85	75	50	80	80	80
L_3	Minimum Street Frontage [1]	40	40	40	40	40	40	40
	Minimum Building Setbacks							
S_1	Street (feet)	40	35	30	25	25	25	25
S_2	Side (interior) (% lot width/feet, whichever is greater)	[2]	10/7	10/6	10/5	10/5	10/5	10/5[3]
S_3	Rear (feet)	20	20	20	20	20	20	20
	Maximum Floor Area Ratio							
	Residential	-	-	-	-	-	-	~~1.50~~ -
	Nonresidential	0.60	0.60	0.60	0.60	0.80	0.80	1.50

C	Maximum Building Coverage (% of lot, principal + accessory)	32	32	32	32	32	32	40
	Maximum Building Height (feet)							
	Overall (highest point)	35	35	35	35	35	35	35
	Eave [4]	25	25	25	25	25	25	-

Notes to Table 2-2:

[1] Minimum lot frontage and lot width requirements do not apply to individual units in attached house projects.

[2] R-1 minimum side setback is ten percent (10%) of lot width or ten feet (10'), whichever is less, with no side setback less than seven feet (7').

[3] Minimum interior side setback for ~~apartment/condo or~~ nonresidential building on lots abutting R-1 through R-5A districts is twenty feet (20'), plus one foot (1') of additional setback for each foot of building height above twenty feet (20'). See Figure 2-2.

[4] The maximum eave height regulation does not apply to dormers, provided that individual dormers do not exceed four and one-half feet (4.5') in width and the combined width of all dormers projecting from a single side of the building does not exceed twenty-five percent (25%) of the length of that side of the building and the dormers are separated by a distance of at least five feet (5'). See Figure 2-3.

[5] Attached houses or two-unit houses are permitted on lots that:

a) abut a major or minor arterial street, as defined in the Village's current Comprehensive Plan, provided that, in the case of through lots, two or more directly abutting lots must have direct access (driveway) to the major or minor arterial street as of March 1, 2027.

SECTION 2. That Section 28.3.030 of the Zoning Ordinance is hereby amended to read as follows:

Sec 28.3.030 Lot And Building Regulations.

The lot and building regulations of Table 3-2 apply to all principal uses and structures in B, O and M districts, except as otherwise expressly stated in this zoning ordinance. General exceptions to lot and building regulations and rules for measuring compliance can be found in Article XIV of this Chapter. Additional regulations governing accessory uses and structures can be found in DGMC Section 28.6.010. See also Figure 2-1.

Table 3-2: B, O and M District Lot and Building Regulations

	Regulations	B-1	B-2	B-3	O-R	O-R-M	M-1	M-2
	Minimum District Area (acres)	2	4	4	10	5[1]	6	6
L1	Minimum Lot Area (square feet)	-	-	-	-	20,000	20,000	20,000
	Minimum Lot Area Per Dwelling Unit (square feet)	Same as R6		-	-	-	-	-
	Maximum Floor Area Ratio (FAR)	0.40	0.75	0.75	0.75[2]	0.80/1.00[3]	1.00	1.00
	Maximum Building Coverage (% of lot)	-	-	-	-	-	60	60
	Building Setbacks (feet)							
S1	Street (see also Sec. 3.040)	25	25	25	75[6]	35[7]	35[7]	35[7]
S2	Side (interior)	-[4]	-[4]	-[4]	30[6]	10[8]	10[8]	20[7][9]
S3	Rear (residential floors)	30	30	30	-	-	-	-

S3	Rear (nonresidential floors)	-[5]	-[5]	-[5]	50[6]	10[8]	10[8]	20[7][9]
	Min. Landscaped Open Space (% of lot)[10]	10	10	10	20	15	10[11]	10
	Maximum Building Height (feet)	35	35	60	112	126/140[3]	37.5	37.5

Notes to Table 3-2:

[1] No minimum district area required north of Ronald Reagan Memorial Tollway or to property zoned M-1 or M-2 on 10-25-1982.

[2] Buildings with a floor area ratio (FAR) in excess of one-half (0.50) are subject to the following:

(1) required parking for floor area in excess of one-half (0.50) FAR must be located underground or in parking garage and

(2) landscaped open space must be provided on at least twenty percent (20%) of the lot.

[3] South of Ronald Reagan Memorial Tollway/North of Ronald Reagan Memorial Tollway.

[4] On lots abutting R districts, minimum side setback of abutting R district must be provided, not to exceed ten feet (10'), plus one foot (1') of additional setback for each foot of building height above twenty feet (20'). See Figure 3-1.

[5] On lots abutting the rear lot line of property in R district, a minimum twenty foot (20') rear setback is required, plus one foot (1') of set-back per foot of building height above twenty feet (20'). On lots abutting the side lot line of property in R districts, the minimum side setback of the abutting R district must be provided, not to exceed ten feet (10'), plus one foot (1') of additional setback per foot of building height above twenty feet (20').

[6] Plus one foot (1') of additional setback for foot of building height above fifty feet (50').

[7] Plus one foot (1') of additional setback for each two feet (2') of building height above thirty-five feet (35').

[8] On lots abutting property in R district, a minimum thirty foot (30') setback is required, plus one foot (1') of additional setback for each two feet (2') of building height above twenty feet (20'). Parking must be set back at least fifteen feet (15') from abutting R district.

[9] Minimum seventy-five foot (75') setback required abutting R district.

[10] At least fifty percent (50%) of required landscaped open space must be located in the street yard.

[11] No minimum street yard landscaping required for properties abutting I-355 and frontage along west side of Thatcher Road.

SECTION 3. That Section 28.4.010 D of the Zoning Ordinance is hereby amended to read as follows:

Sec 28.4.010 D, Downtown Districts.

* * *

(d) Lot and Building Regulations. The lot and building regulations of Table 4-2 apply to all principal uses and structures in D districts, except as otherwise expressly stated in this zoning ordinance. General exceptions to lot and building regulations and rules for measuring compliance can be found in Article XIV of this Chapter. Additional regulations governing accessory uses and structures can be found in DGMC Section 28.6.010. See also Figure 2-1.

Table 4-2: D District Lot and Building Regulations

	Regulations	DC	DB	DT
L_1	Minimum Lot Area (square feet)			
	Detached house	-	-	7,500
	Attached house (applies to development not individual units)	-	-	~~10,500~~ 7,500
	Two-unit house (applies to development not individual units)	-	-	~~10,500~~ 7,500
	Apartment/condo	-	-	~~10,500~~ 7,500
	Other nonresidential buildings / uses	-	-	7,500
	Minimum Lot Area per Dwelling Unit (square feet)	~~900~~	~~800~~	~~1,800 / 4,000~~ [1]
	Detached house	-	-	7,500
	Attached house (applies to development not individual units)	-	2,500	2,500
	Two-unit house (applies to development not individual units)	-	3,750	3,750
	Apartment/condo	900	800	1,800
	Other nonresidential buildings / uses	-	-	7,500
L_2	Minimum Lot Width (feet)	-	-	50
	Minimum Building Setbacks (feet)	-	-	-
S_1	Street	-	~~[2]~~ [1]	10~~[3]~~[2]
S_2	Side (Interior)	-	~~[4]~~ [3]	5
S_3	Rear	-	~~[5]~~ [4]	20
	Build-to Zone			
	Minimum/maximum (feet)	0/5	0/10	-
	Minimum percent of building in primary street BTZ	80	80	-
	Minimum percent of building in secondary street BTZ	30	30	-
	Maximum Floor Area Ratio			

	Apartment / Condo	-	-	~~2.5~~ -
	Nonresidential	-	-	2.5
C	Maximum Building Coverage (% of lot, principal + accessory)	-	-	-
	Building Height (feet)			
	Maximum	40/3 ~~[7]~~[6]	70	36/3 ~~[6][8]~~[5][7]
	Minimum	24/2 ~~[9]~~[8]		24/2 ~~[9]~~[8]

~~[1] Attached house and apartment-condo/detached house and two-unit house.~~

~~[2]~~[1]When the extension of a front or street side lot line coincides with a front or street side lot line of an abutting R-zoned lot, a street setback must be provided on the DB-zoned lot. The street setback in such cases must extend at least thirty-five feet (35') from the abutting R-zoned lot and be at least as deep as the street setback required on the abutting R-zoned lot. A street setback at least eight feet (8') feet in depth must be provided along the remainder of the front or street side lot line. See Figure 4-1.

~~[3]~~[2]No street setback required if street lot line abuts DB zoning districts.

~~[4]~~[3]A side setback is required when abutting the side or rear lot line of an R-zoned lot. The setback must be at least as deep as the minimum side setback required on the abutting R-zoned lot, not to exceed ten feet (10') plus one foot (1') of additional setback for each foot of building height in excess of twenty feet (20'). See Figure 4-2.

~~[5]~~[4]A rear setback is required when abutting the side or rear lot line of an R-zoned lot. When abutting the rear lot line of an R-zoned lot, the setback must be at least twenty feet (20') in depth, plus one foot of additional setback for each foot of building height in excess of twenty feet (20'). When abutting the side lot line of an R-zoned lot, the minimum setback must be at least as deep as the side setback required on the abutting R-zoned lot, not to exceed ten feet (10') plus

one foot (1') of additional setback for each foot of building height in excess of twenty feet (20'). See Figure 4-3.

~~[6]~~[5]Detached houses, attached houses and two-unit houses subject to thirty-five foot (35') maximum height.

~~[7]~~[6]Maximum height is forty feet (40') or three (3) stories, whichever is less.

~~[8]~~[7]Maximum height is thirty-six feet (36') or three (3) stories, whichever is less.

~~[9]~~[8]Minimum height is twenty-four feet (24') or two (2) stories, whichever is more.

SECTION 4. That Section 28.4.010 F of the Zoning Ordinance is hereby amended to read as follows:

Sec 28.4.010 F, Fairview Districts

Table 4-4: F District Lot and Building Regulations

	Regulations	FC	FB	FT
L_1	Minimum Lot Area (square feet)			
	Detached house	-	-	7,500
	Attached house	-	-	~~8,000~~ 7,500
	Attached house (applies to development not individual units)			~~10,500~~ 7,500
	Two-unit house (applies to development not individual units)	-	-	~~10,500~~ 7,500
	Apartment/condo	-	-	7,500
	Other nonresidential buildings / uses			
	Minimum Lot Area per Dwelling Unit (square feet)			
	Detached house	-	-	7,500
	Attached house	-	-	2,500
	Two-unit house	-	-	~~5,250~~ 3,750

	Apartment / Condo	800	1,000	1,000
	Other buildings / uses	-	-	-
L_2	Minimum Lot Width (feet)			
	Detached house	-	-	50
	Attached house	-	-	~~80~~ 50
	Two-unit house	-	-	~~80~~ 50
	Apartment / Condo	-	-	~~80~~ 50
	Other buildings / uses	-	-	50
	Minimum Building Setbacks (feet)	-	-	-
S_1	Street	[1]	[1]	25
S_2	Side (Interior)(% lot width/feet, whichever is greater)	[2]	10/5 [5]	10/5
S_3	Rear	[3]	10 [6]	20
	Build-to Zone			
	Minimum/maximum (feet)	0/5	0/10	-
	Minimum percent of building in primary street BTZ	80	80	-
	Minimum percent of building in secondary street BTZ	30	30	-
	Maximum Floor Area Ratio			
	Apartment / Condo	-	-	-
	Nonresidential	-	-	-
C	Maximum Building Coverage (% of lot, principal + accessory)	-	-	40%
	Building Height (feet)			
	Maximum	60/7[7]	48/4 [4][8]	60/7[7]
	Minimum	24/2	-	-

[1] If adjacent to FT or R-zoned property, a twenty-five foot (25') setback is required for the first thirty-five feet (35') from the FT property line.

[2] If adjacent to FT or R-zoned property, a ten percent (10%) of lot width or five foot (5') setback of abutting FT or R district is required, whichever is greater.

[3] If adjacent to FT or R zoned property, a twenty foot (20') setback is required.

[4] Where the rear yard of the property is located adjacent to the railroad right-of-way, a height bonus of twelve feet (12') or one (1) story is permitted for portions of the building that are setback a minimum of half the lot depth.

[5] If adjacent to FC, no side setback is required.

[6] If adjacent to FC or railroad right-of-way, no rear setback is required.

[7] Maximum height is sixty feet (60') or five (5) stories, whichever is less. For all areas that are within thirty-five feet (35') of FT or R zoned lot, the maximum height is thirty-five feet (35').

[8] Maximum height is forty-eight feet (48') or four (4) stories, whichever is less. For all areas that are within thirty-five feet (35') of an FT or R zoned lot, the maximum height is thirty-five feet (35').

SECTION 5. That Section 28.5.010 of the Zoning Ordinance is hereby amended to read as follows:

Sec 28.5.010 Allowed Uses.

That TABLE 5.1 is deleted in its entirety and replaced with the following:

TABLE 5.1

SECTION 6. That Section 28.5.030 of the Zoning Ordinance is hereby amended to read as follows:

Sec 28.5.030 Residential Use Category.

This category includes uses that provide living accommodations for one (1) or more persons. The residential use subcategories are as follows:

(a) Household Living. Residential occupancy of a dwelling unit by a household. When dwelling units are rented, tenancy is arranged on a month-to-month or longer basis. Uses where tenancy may be arranged for a shorter period are not

considered residential; they are considered a form of lodging. The following are household living specific use types:

(1) Detached House. A detached house is a principal residential building occupied by one dwelling unit located on a single lot with private yards on all sides. Detached houses are not attached to and do not abut other dwelling units.

(2) Attached House. An attached house is a dwelling unit that is attached to ~~one~~ two (2) or more dwelling units, each of which is joined together by party wall or walls or is located on its own lot with a common or abutting wall along the dwelling units' shared lot lines. Each dwelling unit has its own external entrance. These units are commonly known as townhomes or rowhomes.

(3) Two-unit House. A two-unit is a residential building occupied by two (2) dwelling units, both of which are located on a single lot. The dwelling units are attached and may be located on separate floors or side-by-side. These units are commonly known as duplexes.

(4) Apartment/condo. An apartment/condo building is a residential building on a single lot that is occupied by three (3) or more dwelling units that share common walls and/or common floors/ceilings.

(5) Manufactured Housing Unit. A manufactured housing unit is a residential building that complies with the National Manufactured Housing Construction and Safety Standards Act of 1974 (42 U.S.C. §§5401, et seq.). Manufactured housing units are expressly prohibited in the Village.

(6) Mobile Home. A vehicle without motive power used or adaptable for living, sleeping, business or storage purposes, having no foundation other than wheels, blocks, skids, jacks, horses, or skirting, that does not meet building code requirements and has been or reasonably may be equipped

with wheels or other devices for transporting the structure from place to place. Mobile homes are expressly prohibited in the Village.

(7) Mobile Home Park. A mobile home park is a lot upon which mobile homes or manufactured housing units are available for lease or upon which spaces for mobile homes or manufactured housing units are available for lease. Mobile home parks are expressly prohibited in the Village.

(8) Caretaker/Security Dwelling. A single dwelling unit that is accessory to an allowed use and that is occupied solely by an individual who is responsible for maintenance or security in association with the principal non-residential use of the property.

(b) Group Living. Residential occupancy of a building or any portion of a building by a group other than a household. Group living uses typically provide communal kitchen/dining facilities. Examples of group living uses include group homes, convents, monasteries, nursing homes, assisted living facilities, sheltered care facilities, retirement centers, homeless centers, shelters and halfway houses. The group living subcategories are as follows:

(1) Group Home. A detached house shared by persons with disabilities who live together as a single housekeeping unit in a long-term, household-like environment in which staff persons provide care, education, and participation in community activities for the residents with a primary goal of enabling the resident to live as independently as possible. Group homes do not include pre-release, work-release, probationary, or other programs that serve as an alternative to incarceration. See also DGMC Section 28.6.050.

(2) Nursing Home. A “long-term care facility,” as defined in 210 ILCS 45/1-113, that provides skilled nursing care. See also DGMC Section 28.6.080.

(3) Sheltered Care. A "long-term care facility," as defined in 210 ILCS 45/1-113, that provides maintenance and personal care.

SECTION 7. That Section 28.5.050 of the Zoning Ordinance is hereby amended to read as follows:

Sec 28.5.050 Commercial Use Category.

* * *

(c) Assembly and Entertainment. Uses that provide gathering places for participant or spectator recreation, entertainment or other assembly activities. Assembly and entertainment uses may provide incidental food or beverage service. Typical uses include arenas, billiard centers, video game arcades, ~~auditoriums,~~ and bowling centers. The following uses are also included in the assembly and entertainment use subcategory: ~~, cinemas and theaters.~~

(1) Auditorium. A large building or hall primarily used for public gatherings, typically stage performances.

(2) Cinema. A motion picture theater.

(3) Live Music Entertainment Venue. An establishment primarily used for the presentation of live music entertainment and performances typically for a fee or admission charge for participants or spectators. May feature other live performances, including plays, motion pictures, or other dramatic performances, so long as such performances constitute less than fifty percent (50%) of all events.

~~(4) Theater. A building or outdoor area in which plays, movies and other dramatic performances are given.~~

(4) Expressly Prohibited.

The following uses are included in the assembly and entertainment use subcategory but are expressly prohibited in the Village, regardless of any underlying or overlay zoning designation:

a. ~~(1) off-track w~~Wagering facilities ~~locations~~ (as defined in 230 ILCS 5/1); and

b. ~~(2) h~~Hookah lounges, which are defined as facilities or locations whose business operation, whether as a principal use or as an accessory use, includes the smoking of tobacco or other substances through one or more hookah pipes (also commonly referred to as a hookah, waterpipe, shisha or narghile), including but not limited to establishments known variously as hookah bars, hookah parlors or hookah cafés.

(d) Broadcast or Recording Studio. Uses that provide for audio or video production, recording or broadcasting.

(e) Commercial Service. Uses that provide for consumer or business services and for the repair and maintenance of a wide variety of products.

(1) Building Service. Uses that provide maintenance and repair services for all structural and mechanical elements of structures, as well as the exterior spaces of a premise. Typical uses include contractor offices, janitorial, landscape maintenance, extermination, plumbing, electrical, HVAC, window cleaning and similar services.

(2) Business Support Service. Uses that provide personnel services, printing, copying, photographic services or communication services to businesses or consumers. Typical uses include employment agencies, copy and print shops, caterers, telephone answering services and photo developing labs.

(3) Consumer Maintenance and Repair Service. Uses that provide maintenance, cleaning and repair services for consumer goods on a site

other than that of the customer (i.e., customers bring goods to the site of the repair/maintenance business). Typical uses include laundry and dry cleaning pick-up shops, tailors, taxidermists, dressmakers, shoe repair, picture framing shops, locksmiths, vacuum repair shops, electronics repair shops and similar establishments. Business that offer repair and maintenance service technicians who visit customers' homes or places of business are classified as a "building service."

(4) Personal Improvement Service. Uses that provide a variety of non-medical services associated with frequent, recurrent, and instructional needs.

a. General Personal Improvement Services. Uses serving individual necessities, such as personal grooming and general well-being. Typical uses include barbers, beauty and nail salons, day spas, and microblading. ~~and businesses purporting to offer fortune-telling or psychic services.~~

b. Health and Fitness Services. Uses that provide physical fitness services and leisure time activities. Typical uses include health clubs, yoga studios, martial arts studios, dance studios, and gymnastics studios

c. Studio or Instructional Services. Uses in an enclosed building that focus on providing education, individual or group instruction or training in music, drama, fine arts, arts studios, language or similar activities. Also includes artist studios and photography studios.

d. Fortune-telling or Psychic Service. Uses pertaining to predictions of the future based upon intuitive or mental powers or supernatural influences and not statistical or otherwise empirical evidence.

~~d.~~e. Massage Therapy Services. Establishments whose primary business is that of providing massage – defined as any method of pressure on or friction against, or stroking, kneading, rubbing, tapping, pounding, vibrating or stimulating of the external soft parts of the body with the hands or with aid of any mechanical electrical apparatus or appliances with or without rubbing alcohol, liniments, antiseptics, oils, powder, creams, lotions, ointments or other similar preparations used in this practice, under such circumstances that it is reasonably expected that the person to whom treatment is provided, or some third party on such persons behalf, will pay money or give other consideration or any gratuity therefor. See also DGMC Section 28.6.070.

~~e.~~f. Tattoo and body piercing establishments as defined in 410 ILCS 54/1.

(f) Day Care. Uses providing care, protection and supervision for children or adults on a regular basis away from their primary residence for less than twenty-four (24) hours per day. Examples include state-licensed child care centers, preschools, nursery schools, head start programs, after-school programs and adult day care facilities. Day care expressly includes state-accredited adult day care facilities and facilities for child care, as defined in the Illinois Child Care Act.

(1) Day Care Center. A facility licensed by the State of Illinois that provides day care for more than eight (8) children or any number of adults. See also Sec. 6.030.

(2) Day Care Home. A dwelling unit licensed by the State of Illinois in which day care is provided for a maximum of ~~eight (8)~~ twelve (12) children, ~~excluding~~ including all natural, adopted and foster children of the residents of the dwelling unit. See also DGMC Section 28.6.030.

(g) Eating and Drinking Establishments

(1) Restaurant. Uses that prepare and serve food and beverages for on- or off-premise consumption as their principal business. Typical uses include cafés, restaurants, cafeterias, ice cream/yogurt shops, coffee shops and similar establishments, which may include a bar area that is customarily incidental and subordinate to the principal use as an eating establishment and that complies with Chapter 3 of this Code.

(2) Wine and/or Beer Boutique. An establishment where the retail sale of wine and/or beer, wine and/or beer tastings and wine and/or beer education seminars/classes are conducted on a regular basis and on-site consumption of wine and beer is allowed subject to provisions of the wine and/or beer boutique license classification (see Chapter 3 of this Code).

(3) Brewing Facility: Brewing facilities are engaged predominantly in manufacturing, but may include a bar or restaurant, and incidental sales. A place kept, used, maintained, advertised or held out to the public as a place in which the primary business is the distribution, manufacture, packaging, sale and storage of craft beer produced on the premises in compliance with Federal and State laws. On-site consumption of wine, beer or alcoholic liquor is allowed subject to provisions of DGMC Chapter 3 of this Code.

SECTION 8. That Section 28.5.060 of the Zoning Ordinance is hereby amended to read as follows:

Sec 28.5.060 Wholesale, Distribution And Storage Use Category.

This category includes uses that provide and distribute goods in large quantities, principally to retail sales, commercial services or industrial establishments. Long-term and short-term storage of supplies, equipment, commercial goods and personal items is included. The wholesale, distribution & storage subcategories are as follows:

(a) Equipment and Materials Storage, Outdoor. Uses related to outdoor storage

of equipment, products or materials, whether or not stored in containers.

(b) Trucking and Transportation Terminal. Uses engaged in the dispatching and long-term or short-term storage of trucks, buses and other vehicles, including parcel service delivery vehicles, taxis and limousines. Minor repair and maintenance of vehicles stored on the premises is also included. Includes uses engaged in the moving of household or office furniture, appliances and equipment from one location to another, including the temporary on-site storage of those items.

(c) Warehouse. Uses conducted within a completely enclosed building that are engaged in long-term and short-term storage of goods and that do not meet the definition of a "self-service storage facility" or a "trucking and transportation terminal." Such uses may also include incidental retail sales.

(d) Wholesale Sales and Distribution. Uses engaged in the wholesale sales, bulk storage and distribution of goods. Such uses may also include incidental retail sales and wholesale showrooms. This subcategory expressly includes the following uses: bottled gas and fuel oil sales, ice distribution centers, monument sales, storage building sales, vending machine sales, auctioneers and frozen food lockers.

SECTION 9. That Section 28.5.070 of the Zoning Ordinance is hereby amended to read as follows:

Sec 28.5.070 Industrial Use Category.

This category includes uses that produce goods from extracted and raw materials or from recyclable or previously prepared materials, including the design, storage and handling of these products and the materials from which they are produced. The industrial subcategories are:

(a) *Artisan Industrial*. On-site production of goods by hand manufacturing, involving the use of hand tools and small-scale, light mechanical equipment in a completely enclosed building with no outdoor operations or storage.

Typical uses include woodworking and cabinet shops, ceramic studios, jewelry manufacturing and similar types of arts and crafts or very small-scale manufacturing uses that have no negative external impacts on surrounding properties. Such uses may also include incidental retail sales.

(b) *Limited Industrial*. Manufacturing and industrial uses that process, fabricate, assemble, treat or package finished parts or products without the use of explosive or petroleum materials. Uses in this subcategory do not involve the assembly of large equipment and machinery and have very limited external impacts in terms of noise, vibration, odor, hours of operation and truck and commercial vehicle traffic. Such uses may also include incidental retail sales.

(c) *General Industrial*. Manufacturing and industrial uses that process, fabricate, assemble or treat materials for the production of large equipment and machines as well as industrial uses that because of their scale or method of operation regularly produce odors, dust, noise, vibration, truck/commercial vehicle traffic or other external impacts that are detectable beyond the property lines of the subject property. Such uses may also include incidental retail sales.

(d) *Intensive Industrial*. Manufacturing and industrial uses that regularly use hazardous chemicals or procedures or produce hazardous byproducts, including the following: manufacturing of acetylene, cement, lime, gypsum or plaster-of-Paris, chlorine, corrosive acid or fertilizer, insecticides, disinfectants, poisons, explosives, paint, lacquer, varnish, petroleum products, coal products, plastic and synthetic resins and radioactive materials. This subcategory also includes petrochemical tank farms, gasification plants, smelting, asphalt and concrete plants and tanneries. Intensive industrial uses have high potential for external impacts on the surrounding area in terms of noise, vibration, odor, hours of operation and truck/commercial vehicle traffic.

(e) *Junk or Salvage Yard*. An area or building where waste or scrap materials are bought, sold, exchanged, stored, baled, packed, disassembled or handled for reclamation, disposal or other like purposes, including but not limited to scrap iron and other metals, paper, rags, rubber tires and bottles.

SECTION 10. That Section 28.6.010 of the Zoning Ordinance is hereby amended to read as follows:

Section 28.6.010 Accessory Uses.

* * *

(e) Reserved. ~~*Electric Vehicle Charging Stations*~~

~~General~~

~~Private (restricted-access) electric-vehicle (EV) charging stations are permitted as accessory uses in all zoning districts.~~

~~Public electric vehicle charging stations are permitted as accessory uses to allowed nonresidential uses in all zoning districts.~~

~~Parking~~

~~Electric vehicle charging stations may be counted toward satisfying minimum off-street parking space requirements.~~

~~Public electric vehicle charging stations must be reserved for parking and charging electric vehicles.~~

~~Equipment. Vehicle charging equipment must be designed and located so as to not impede pedestrian, bicycle or wheelchair movement or create safety hazards on sidewalks. Equipment is subject to the lot and building regulations of the subject zoning district unless otherwise expressly stated.~~

Maintenance. Electric vehicle charging stations must be maintained in all respects, including the functioning of the equipment. A phone number or other contact information must be provided on the equipment for reporting when it is not functioning or when other problems are encountered.

(f)*(i) Extended Family Accessory Housing*

(1) Where Allowed. Extended family accessory housing units may be approved in R-1, R-2, R-3 and R-4 districts, in accordance with the special use procedures of DGMC Section 28.12.050.

(2) Location. An extended family accessory housing unit must be located within the principal detached house. It may not be located in an accessory structure.

(3) Regulations. Approved extended family accessory housing units are subject to all of the following regulations.

a. Only one (1) extended family accessory housing unit is allowed within any detached house.

b. A separate exterior entrance may be added to serve an extended family accessory housing unit, provided that the door does not face the street.

c. The principal dwelling unit or the extended family accessory housing unit must be occupied by the legal or beneficial owner of the subject lot.

d. Only persons related by blood, marriage, or adoption to the occupants of the primary unit may occupy the extended family accessory housing unit. Further, at least one (1) of the units—the principal dwelling unit or the extended family accessory housing unit—must be occupied by a person either sixty-two (62) years of age or older or by a person with a physical or developmental disability that renders joint occupancy of the detached house medically necessary, beneficial, or desirable. Applicants for special use approval for extended family accessory housing have the burden of proving that such physical or developmental condition renders the joint occupancy of the detached house

~~medically necessary, beneficial or desirable. Special use approval for any extended family accessory housing unit will remain valid and in effect only such period of time as the occupancy requirements of this Section are met.~~

~~e. No additional roomers or boarders are allowed in any detached house occupied by an extended family accessory housing unit.~~

~~f. Detached houses containing extended family accessory dwelling unit must retain the appearance of a detached house. Floor plans and other specifications must be submitted and approved at the time of special use approval. Occupancy of an extended family accessory housing unit is subject to compliance with an approved floor plan for construction or conversion of the principal and accessory units, and to elevation drawings depicting the exterior appearance of the principal dwelling.~~

~~g. All owners of any extended family accessory housing dwelling are required to permit an annual inspection of the premises to assure continuing compliance with the requirements of this Section, and to submit to the Village on or before January 31 of each year a sworn affidavit certifying continued compliance with these regulations. The affidavit must identify all owners and the occupants of the principal and accessory units and their relationship to one another. Failure to maintain compliance with these regulations or failure to file the required affidavit will result in lapse of approval of the special use on the thirtieth (30th) day following notice of noncompliance, unless within that 30-day period, the owner of the extended family accessory housing unit remedies any defects causing noncompliance and obtains village approval that compliance has been established.~~

~~h. Special use approval for an extended family accessory housing unit will also lapse and be of no further effect if the owner occupying one (1) of the units transfers his or her interest to any other person or ceases to occupy the unit, unless the transfer is to a person who meets all applicable criteria and the~~

~~Village is notified of the transfer, or unless the village approves a new special use for the extended family accessory housing unit.~~

~~i. Within one hundred twenty (120) days of any expiration of special use approval for an extended family accessory housing unit, the property must be converted to a detached house (that does not contain an accessory housing unit) pursuant to reconversion plans submitted at the time of application for special use approval, unless the reconversion period is extended by the community development director for just cause shown.~~

~~(f)(ii) Extended Family Accessory Housing in the Fairview Transitional (FT) Zoning District: Notwithstanding anything in subsection (f)(i) above, to the contrary, the following general extended family accessory housing regulations, apply to properties located in the FT district.~~

~~(1) Where Allowed. Extended family accessory housing units are permitted in the FT district.~~

~~(2) Location. An extended family accessory housing unit may be located within the principal or accessory structure.~~

~~(3) Regulations. Approved extended family accessory housing units are subject to all of the following regulations.~~

~~a. Only one (1) extended family accessory housing unit may be located on a single lot of record.~~

~~b. A separate exterior entrance may be added to a principal detached house to serve an extended family accessory housing unit, provided that the door does not face the street.~~

~~c. The principal dwelling unit or the extended family accessory housing unit must be occupied by the legal or beneficial owner of the subject lot.~~

~~d. Only persons related by blood, marriage, adoption, or civil union to the occupants of the primary unit may occupy the extended family accessory housing unit.~~

~~e. No additional roomers or boarders are allowed in any principal or accessory structure occupied by an extended family accessory housing unit.~~

~~f. Detached houses containing extended family accessory dwelling units must retain the appearance of a detached house.~~

~~g. Floor area devoted to the extended family accessory housing unit located within the principal structure may not exceed forty percent (40%) of the floor area of the primary structure or one thousand (1,000) square feet, whichever is less. Within an accessory structure the floor area devoted to the extended family accessory housing unit may not exceed one thousand (1,000) square feet. See DGMC 28.6.010 for additional regulations on residential accessory buildings.~~

(f) Accessory Dwelling Units (ADUs)

(1) All Extended Family Accessory Housing Units created prior to March 1, 2027 shall be deemed a legal conforming ADU.

(2) Where Allowed. ADUs are allowed by-right in all the Residential (R) zoning districts, the Downtown Transition (DT) zoning district and the Fairview Transition (FT) zoning district.

(3) Location. An ADU may be located within a principal or accessory structure.

(4) Regulations. ADUs are subject to all of the following regulations.

a. Only one (1) ADU is allowed on a single lot of record.

b. Only one (1) household may reside in an ADU.

c. A separate exterior entrance may be added to a principal detached house to serve an ADU.

d. The principal dwelling unit or the ADU must be occupied by the

legal or beneficial owner of the subject lot.

e. Detached houses containing an ADU must retain the appearance of a detached house.

f. Floor area devoted to an ADU located within the principal structure may not exceed forty percent (40%) of the floor area of the primary structure or one thousand (1,000) square feet, whichever is less. Within an accessory structure the floor area devoted to an ADU may not exceed one thousand (1,000) square feet. See DGMC Section 28.6.010 for additional regulations on residential accessory buildings.

g. One (1) additional parking space shall be provided on-site for the ADU.

h. All utilities associated with the ADU shall be provided from the principal structure.

i. In cases where an ADU is located in an accessory structure, both the ADU and the land upon which the ADU is located shall remain under the same ownership of the principal structure and may not be subdivided.

(i) Garages

(a) Only one (1) detached garage and either one (1) carport or one (1) solar canopy are allowed per lot in Downtown Transition (DT), Fairview Transition (FT) and R zoning districts.

~~Dwelling units are expressly prohibited in the space above any detached garage in all zoning districts, except for the Fairview Transitional District (FT) zoning district.~~

See Figure 6-2. Reserved.

~~Figure 6-2: Space Above Detached Garage~~

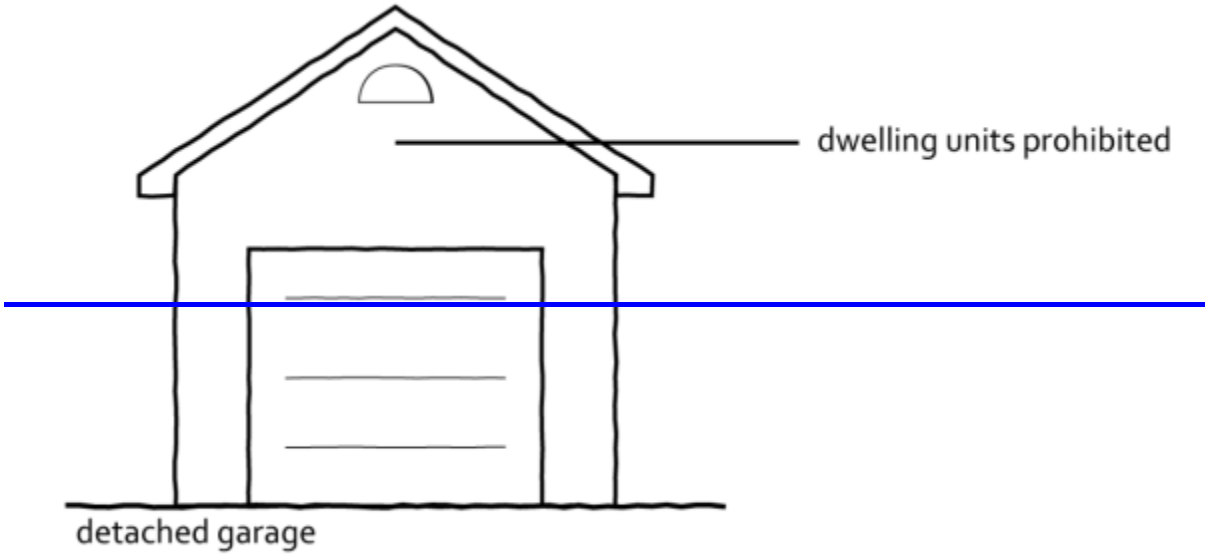

* * *

(m)(i) Solar Car Canopies

(1) In R zoned districts, DT and FT zoning districts the cumulative total square footage of solar car canopies may not exceed the total principal building footprint. In all other districts, solar car canopies are a permitted accessory structure on surface parking lots regardless of the existence of a principal building. Solar car canopies are not permitted in the Downtown Core (DC), Downtown Business (DB), Fairview Core (FC) and Fairview Business (FB) zoning districts.

(2) A solar car canopy is a permitted accessory structure located on top of a commercial or public parking garage(s). The solar car canopy may cover the entire garage. The maximum height for a solar car canopy as identified below is measured from the deck of the highest level of parking.

(3) Solar car canopies shall not exceed twenty-three feet (23') in height and shall either have a minimum vehicle clearance of eight feet (8') in height or the

minimum clearance for emergency vehicles as determined by the Community Development Director, whichever is higher.

(m) (ii) Solar Energy Systems

* * *

SECTION 11. That Section 28.6.030 of the Zoning Ordinance is hereby amended to read as follows:

Sec 28.6.030 Day Care.

(a) Day care centers and day care homes must be licensed by the State of Illinois under the Illinois Child Care Act (225 ILCS 10/2.09) or other applicable statute, or accredited by the State of Illinois as an adult daycare facility.

(b) Day care homes and day care centers for children in R districts must include an outdoor play area, fenced and screened from view from adjoining properties by a solid fence with a minimum height of six feet (6'), with a minimum of two hundred fifty (250) square feet of outdoor play area for each child at the facility, based on maximum enrollment of the day care facility.

(c) Day care centers for children located in nonresidential districts must include an outdoor play area, fenced and screened from view from adjoining properties by a solid fence with a minimum height of six feet (6'), with a minimum of seventy-five (75) square feet of outdoor play area for each child in the play area at any one time.

SECTION 12. That Section 28.6.040 of the Zoning Ordinance is hereby amended to read as follows:

Section 28.6.040 Fueling Stations.

Fueling stations are subject to the following regulations:

(a) Setbacks

(1) Interior side and rear setbacks with a minimum depth of twenty feet (20') must be provided abutting R-zoned lots. Setbacks abutting all other lot lines must comply with district requirements.

(2) Except for approved driveways and drive aisles, setbacks may not be paved and must be landscaped green space.

(b) Protective Curb. All landscaped areas must be protected by a raised curb at least six inches (6") in height or by a bumper guard of not more than eighteen inches (18") in height. Protective curbing at least six inches (6") in height must be provided along the edges of all areas accessible to motor vehicles upon adjacent property or street rights-of-way, except that provision may be made for cross-access to abutting commercial development.

(c) Upon the reconstruction of a majority of existing fuel pumps, a redevelopment of the site or the construction of a new fueling station, one (1) Electric Vehicle Supply Equipment (EVSE), Level-3 installed public parking space shall be provided per four (4) fuel pumps/dispensers, up to a maximum of three (3) EVSE Level-3 spaces.

SECTION 13. That Section 28.6.050(a) of the Zoning Ordinance is hereby amended to read as follows:

Sec 28.6.050 Group Homes.

(a) Small Group Homes. Group homes for eight (8) or fewer persons, including supervisory and oversight personnel, are permitted as of right in all districts that allow household living uses as of right, subject to the following regulations:

(1) The use must occupy a detached house, which is consistent in type and general outward appearance with other detached houses in the surrounding area.

(2) The facility must be operated by a governmental, religious or other not-for-profit agency.

(3) Occupancy may not exceed one (1) person per room, where "room" means a whole room used for living purposes, including living rooms, dining rooms, kitchens, bedrooms, furnished recreation rooms and enclosed porches suitable for year-round use, but not including strip or Pullman kitchens, bathrooms, open porches, balconies, halls, half-rooms, utility rooms, unfurnished attics, unfinished basements or unfinished storage spaces.

(4) A copy of the State license or certification for the group home, if a State license or certification is required it must be provided to the Village.

~~(5) Each proposed small group home must be separated by a minimum distance of five hundred feet (500') from any existing group home, as measured in a line from the nearest point of a lot line occupied by a group home to the nearest point of a lot line occupied by a group home.~~

~~(6)~~(5) An inspection must be conducted by the Community Development Department to ensure that existing building code requirements for residences are met prior to any occupancy or re-occupancy.

~~(7)~~(6) Small group home uses may not include any formalized counseling for persons other than the residents of the group home and may not include any formalized medical treatment other than physical or occupational therapy for residents only.

~~(8)~~(7) Small group home uses may not be any type of "long-term care facility," as defined in 210 ILCS 45/1-113.

~~(9)~~(8) In order to implement these requirements, a statement of the number of proposed occupants, a copy of the necessary licenses or certificates, if any are required, a floor plan depicting the number, size and location of rooms, and a site plan must be submitted at the time of application for an occupancy permit.

* * *

SECTION 14. That Section 28.6.140(c)(1) of the Zoning Ordinance is hereby amended to read as follows:

Sec 28.6.140 Temporary Real Estate Offices.

* * *

(c) R-1, R-2, R-3 and R-4 Districts. Temporary real estate sales offices in R-1, R-2, R-3 and R-4 zoning districts are subject to the following regulations:

(1) ~~No more than twenty-five percent (25%) of the gross floor area of a dwelling may be used for sales office purposes.~~ Sales may be conducted in a model dwelling unit and the ~~remainder of~~ building may be used for displaying styles of architecture, construction work, interior decoration and similar matters related to real estate sales.

* * *

SECTION 15. That Section 28.6.200 of the Zoning Ordinance is hereby added as follows:

Section 28.6.200 Small Wind Energy Systems (SWES).

(a) Building-mounted wind energy system (BMWES)

(1) BMWES are not permitted in the Downtown Core (DC), Downtown Business (DB), Fairview Core (FC) and Fairview Business (FB) Districts. BMWES are a permitted accessory use in all other zoning districts.

(2) BMWES may be located on a principal or accessory structure.

(3) BMWES may have either a Horizontal Axis Wind Turbine (HAWT) or a Vertical Axis Wind Turbine (VAWT).

(4) In R, DT and FT zoning districts, only VAWT systems are allowed; HAWT systems are prohibited. No more than three (3) VAWT systems are permitted on a single property in R, DT and FT zoning districts.

(5) In all other non-residential zoning districts, both a HAWT and VAWT systems are allowed.

(6) In no case shall BMWES exceed the maximum height allowed in the subject zoning district.

(7) BMWES shall be setback from all adjacent lot lines a minimum distance equal to the total height of the BMWES.

(8) In R, DT and FT zoning districts, the combined diameter of a BMWES shall not exceed twenty percent (20%) percent of the width of each building elevation facing a street.

(9) In non-residential zoning districts (except as noted above), the combined diameter of a BMWES shall not exceed fifty percent (50%) of the width of each building elevation facing a street.

(10) The BMWES shall be sited such that shadow flicker will not fall on any window of an existing residential building, regardless of the zoning district that the residential building is located in, on an abutting property for more than one (1) hour per day. A shadow flicker study may be required that demonstrates the locations and the expected duration of shadow flicker caused by the BMWES, as determined by the Community Development Director.

(b) Freestanding wind energy system (FSWES)

(1) FSWES are not permitted in the Downtown Core (DC), Downtown Business (DB), Fairview Core (FC) and Fairview Business (FB) zoning districts. FSWES are a permitted accessory use in all other zoning districts.

(2) In R-zoned, DT and FT districts:

a. Only one (1) FSWES is permitted on the property.

b. The FSWES is only permitted in rear yards.

c. The FSWES maximum height is thirty-five feet (35'), to the highest point of the system when fully operational.

d. The FSWES shall be setback a distance equal to one hundred ten percent (110%) of the system height from the base of the tower to all property lines.

(3) In non-residential zoning districts (except as noted above):

a. No more than two (2) FSWES are permitted on the property.

b. FSWES are permitted in street, side or rear yards.

c. FSWES maximum height is seventy-five feet (75'), measured from the adjacent established grade to the highest point of the system when fully operational.

d. When located adjacent to other non-residentially zoned property, the FSWES shall be setback a distance equal to one hundred ten percent (110%) of the system height from the base of the tower to all property lines.

e. When located adjacent to an R, DT or FT zoning districts property or when located adjacent to an existing residential building, regardless of the zoning district that the residential building is in, the FSWES shall be setback a distance equal to one hundred fifty percent (150%) of the system height and in no case shall the tower base be located within one hundred feet (100') of all adjacent property lines.

f. The FSWES facility shall be sited such that shadow flicker will not fall on any existing residential building, regardless of the zoning district that the residential building is in, within five hundred feet (500') of the FSWES property for more than one (1) hour per day. A shadow flicker study may be required that demonstrates the locations and the expected duration of shadow flicker caused by the FSWES, as determined by the Community Development Director.

SECTION 16. That Section 28.6.210 of the Zoning Ordinance is hereby added as follows:

Section 28.6.210 Electric Vehicle Charging Stations.

(1) General

a. Private (restricted-access) electric-vehicle charging stations are permitted as accessory uses in all zoning districts.

b. Public electric vehicle charging stations are permitted as accessory uses in all non-residential zoning districts and permitted as an accessory use for non-residential uses located in R districts.

(2) Parking

a. Electric vehicle charging stations may be counted toward satisfying minimum off-street parking space requirements.

b. Public electric vehicle charging stations must be reserved for parking and charging electric vehicles.

c. Installation of public Electric Vehicle Supply Equipment (EVSE)-ready or EVSE-installed spaces are required upon a parking lot reconstruction, a site redevelopment or new construction.

d. Level 1 EVSE chargers are prohibited for public use.

e. Minimum number of required EVSE-ready or EVSE-installed spaces for all uses, excluding fueling stations, is ten percent (10%) of all parking spaces (rounded to the nearest whole number), not to exceed six (6) total EVSE-installed spaces. EVSE-installed spaces must be Level 2 or Level 3 EVSE-ready spaces.

f. All locations where a public EVSE-ready installed space is located, at least one (1) parking space shall be equipped with an accessible charging station meeting the requirements of the current Illinois Accessibility Code.

g. EVSE-installed spaces may not be located in garage levels located below grade.

h. Reduction of number of required spaces for EVSE-ready or EVSE-installed spaces. Each EVSE-ready and EVSE-installed parking space provided results in a parking space reduction as indicated in Table 6-2 when calculating the minimum off-street parking requirements of Section 28.7.030. Tables 6-3a and 6-3b offer examples of compliance with DGMC Section 28.6.210. These EVSE parking reductions do not apply to residential uses.

Table 6-2 – Required Parking Space Reduction Table

Type of EVSE public parking space	Number of required parking spaces credited
EVSE-ready	One and a half (1.5) credited spaces per 1 EVSE-ready space
Level 2 EVSE-installed	Two (2.0) credited spaces per 1 Level 2 EVSE-installed space
Level 3 EVSE-installed	Three (3.0) credited spaces per 1 Level 3 EVSE-installed space

Table 6-3a Example Parking Space Reduction Table, 25 Parking Spaces Lot Proposed

Parking Spaces	Required amount of EVSE-Ready	Level 2 EVSE-Installed	Level 3 EVSE-Installed
Total EVSE Spaces Required (per DGMC Section 28.6.210(2)(e))	3	3	3
Parking Reduction (Per Table 6-2)	5	6	9
Total Parking Spaces Required to be installed	20	19	16

(with EVSE Credit)			

Table 6-3b Example Parking Space Reduction Table, 50 Parking Spaces Lot Proposed

Parking Spaces	Required amount of EVSE-Ready	Level 2 EVSE-Installed	Level 3 EVSE-Installed
Total EVSE Spaces Required (per DGMC Section 28.6.210(2)(e))	5	5	5
Parking Reduction (Per Table 6-2)	8	10	15
Total Parking Spaces Required to be installed (with EVSE Credit)	42	40	35

(3) Equipment. Electric Vehicle charging equipment must be designed and located so as to not impede access or create any safety hazards. Equipment is subject to the lot and building regulations of the subject zoning district unless otherwise expressly stated.

a. Equipment shall be safe for use in inclement weather.

b. Equipment shall be protected by wheel stops, concrete filled bollards and curbing. Accessible charging equipment shall be protected by wheel stops and concrete filled bollards. All equipment shall be located in an easily accessible location for maintenance purposes.

c. Charging cables shall retract and shall not extend across walking paths to prevent hazards.

d. Emergency shut-offs / disconnects shall be provided and shall be a minimum of seventy-five feet (75') from all equipment.

e. A sound study shall be submitted if a Level 3 EVSE is installed within fifty feet (50') of a residential zoning district. The sound study shall demonstrate compliance with DGMC Section 28.10.040(b).

f. Equipment is permitted in all yards subject to screening requirements.

(4) Maintenance. Electric vehicle charging stations must be maintained in all respects, including the functioning of the equipment. A phone number or other contact information must be provided on the equipment for reporting when it is not functioning or when other problems are encountered.

(5) Screening. All transformers and current transformer cabinets shall be located on an appropriately designed concrete or other paved material pad and apron and shall be screened from view of streets and all abutting lots with a wall or solid fence at least six feet (6') feet in height. Enclosure doors shall be located and designed so that, to the maximum extent possible, they do not face towards an abutting property, sidewalk or street. Private electric vehicle charging stations are exempt from these screening requirements.

(6) Signage

a. Each electric vehicle charging parking space for public use must indicate that the space is reserved for the exclusive use of charging electric vehicles.

b. The accessible charging station must indicate that it is reserved for the use of persons with disabilities or must have a sign installed indicating that the station is an accessible EVSE that should be occupied by users with disabilities first.

c. All other signage associated with EVSE are subject to Article IX of this Chapter.

SECTION 17. That Section 28.7.020 of the Zoning Ordinance is hereby amended to read as follows:

Sec 28.7.020 Maximum Requirements.

~~Commercial~~ Non-residential uses requiring ~~one hundred (100)~~ fifty (50) or more parking spaces may not provide more than one hundred forty percent (140%) of parking in excess of the minimum standards as set forth in Table 7-1 ~~four and one-half (4.5) spaces per one thousand (1,000) square feet of floor area~~ unless otherwise approved through the special use approval process of DGMC Section 28.12.050. The special use permit application must include a parking study prepared by professional transportation planner or traffic engineer that includes, but is not limited to, the estimates of parking demand based on reliable data collected from comparable uses or on external data from credible research organizations (e.g., Institute of Transportation Engineers (ITE) or American Planning Association).

SECTION 18. That Section 28.7.030 of the Zoning Ordinance is hereby deleted in its entirety and amended to read as follows:

Sec 28.7.030 Minimum Motor Vehicle Parking Ratios.

Except as otherwise expressly stated, off-street ~~motor~~ vehicle parking spaces must be provided in accordance with TABLE 7.1

Table 7-1: Minimum Motor Vehicle Parking Requirements

~~USE CATEGORY~~	~~Minimum Motor Vehicle Parking~~
~~Subcategory~~	
~~Specific use (See DGMC Section 28.5.020)~~	
~~RESIDENTIAL~~	
~~Household Living (except for the following uses)~~	~~2 spaces per dwelling unit~~

~~Apartment/condo in DB, DC, FC and FB zoning districts~~	~~1.4 spaces per dwelling unit~~
~~Apartment/condo (for persons 62 or older)~~	~~0.6 spaces per dwelling unit~~
~~Apartment/condo (for persons 62 or older and offering on-site assisted living services)~~	~~0.4 spaces per dwelling unit~~
~~Apartment/Condo (Inclusive Dwelling Units provided for in the F Zoning Districts)~~	~~1 space per Inclusive Dwelling Unit~~
~~Group Living~~	~~0.5 spaces per bed~~
~~PUBLIC, CIVIC AND INSTITUTIONAL~~	
~~Aircraft Landing Area~~	~~per DGMC Section 28.7.040(g)~~
~~College or University~~	~~per DGMC Section 28.7.040(g)~~
~~Community Center~~	~~1 space per 4 occupants (maximum capacity)~~
~~Fraternal Organization~~	~~4 spaces per 1,000 square feet~~
~~Governmental Facility~~	~~per DGMC Section 28.7.040(g)~~
~~Hospital~~	~~per DGMC Section 28.7.040(g)~~
~~Library~~	~~5 spaces per 1,000 sq. ft.~~
~~Museum or Cultural Facility~~	~~2 spaces per 1,000 sq. ft.~~
~~Natural Resource Preservation~~	~~None~~
~~Parks and Recreation~~	
~~Park~~	~~5 spaces per acre~~
~~Swimming pool~~	~~10 spaces per 1,000 sq. ft. of water surface~~
~~Tennis court~~	~~2.25 per court~~
~~Religious Assembly~~	
~~Existing as of 01-14-1991 and located within 1,000~~	~~1 space per 8 occupants (maximum capacity)~~

feet of DC or DB zoning district	
All other	1 space per 4 occupants (maximum capacity)
Safety Service	per DGMC Section 28.7.040(g)
School	
Elementary and Junior High	0.10 spaces per student
Senior High	0.30 spaces per student
Utilities and Public Service Facility	
Minor	None
Major	per DGMC Section 28.7.040(g)
Wireless Telecommunications	None
COMMERCIAL	
Adult Entertainment Establishment	per DGMC Section 28.7.040G
Animal Service	3.5 spaces per 1,000 sq. ft.
Assembly and Entertainment (except for the following uses)	1 space per 3 occupants (maximum capacity)
Bowling alley	4 per lane, plus parking required by this section for restaurants, bars, and other affiliated uses
Commercial Service (except for the following uses)	3.5 spaces per 1,000 sq. ft.
Building service	1.17 spaces per 1,000 sq. ft.
Personal improvement services	4 spaces per 1,000 sq. ft.
Health club, fitness facility	5 spaces per 1,000 sq. ft.
Studio or instructional services	3.5 spaces per 1,000 sq. ft.
Research service	1.17 spaces per 1,000 sq. ft.

~~Day Care~~	~~2 spaces per 1,000 sq. ft., plus 1 drop-off or pick-up space per 1,000 sq. ft. (not to exceed a maximum of 10)~~
~~Eating and Drinking Establishment (except for the following uses)~~	~~10 spaces per 1,000 sq. ft. or 1 space per 4 seats, whichever is greater, plus stacking spaces per Section 7.130.~~
~~Carry-out restaurant~~	~~3.5 spaces per 1,000 sq. ft.~~
~~Restaurant with lounge~~	~~12.5 spaces per 1,000 sq. ft. or 1 space per 4 seats, whichever is greater~~
~~Financial Service~~	~~3.5 spaces per 1,000 sq. ft., plus stacking spaces per Sec. 7.130~~
~~Funeral or Mortuary Service~~	~~12.5 spaces per 1,000 sq. ft.~~
~~Lodging~~	~~1.25 spaces per room, plus parking required by this section for restaurants, bars, banquet facilities and other accessory uses~~
~~Office~~	
~~Business and professional office~~	~~3 spaces per 1,000 sq. ft.~~
~~Medical, dental and health practitioner~~	~~4.50 spaces per 1,000 sq. ft.~~
~~Parking, Non-Accessory~~	~~None~~
~~Retail Sales (except for the following uses)~~	~~3.50 spaces per 1,000 square feet~~
~~Furniture/large appliance store~~	~~1.67 spaces per 1,000 sq. ft.~~
~~Grocery store over 20,000 sq. ft.~~	~~4.0 spaces per 1,000 sq. ft.~~
~~Shopping center (multi-tenant)~~	~~4.0 spaces per 1,000 sq. ft.~~
~~Self-service Storage Facility~~	~~0.2 spaces per 1,000 sq. ft.~~
~~Trade School~~	~~1 space per 4 occupants (maximum capacity)~~
~~Vehicle Sales and Service~~	

~~Commercial vehicle repair and maintenance~~	~~1 per service bay, plus stacking spaces per Section 7.130.~~
~~Commercial vehicle sales and rentals~~	~~2 spaces per 1,000 sq. ft. of showroom area, plus 0.4 spaces 1,000 sq. ft. of outdoor display space, plus 2 per service bay~~
~~Fueling station~~	~~1 space per pump island, plus 1 space per service bay, plus 3.33 spaces per 1,000 sq. ft. of retail sales area, plus stacking spaces per Section 7.130.~~
~~Personal vehicle repair and maintenance~~	~~1 per service bay, plus stacking spaces per Section 7.130.~~
~~Car wash~~	~~1 per wash bay, plus stacking spaces per Section 7.130.~~
~~Personal vehicle sales and rentals~~	~~2 spaces per 1,000 sq. ft. of showroom area, plus 0.4 spaces 1,000 sq. ft. of outdoor display space, plus 2 per service bay~~
~~Vehicle body and paint finishing shop~~	~~1 per service bay, plus stacking spaces per Section 7.130.~~
~~WHOLESALE, DISTRIBUTION & STORAGE~~	~~0.67 spaces per 1,000 sq. ft.~~
~~INDUSTRIAL~~	~~1.17 spaces per 1,000 sq. ft.~~
~~RECYCLING~~	
~~Recyclable Material Drop-off Facility~~	~~per DGMC Section 28.7.040(g)~~
~~AGRICULTURE~~	
~~Community Garden~~	~~None~~
~~OTHER~~	
~~Drive-in or Drive-through Facility~~	~~Stacking spaces per DGME Section 28.7.130~~
~~Medical Cannabis Dispensing Organization~~	~~6 spaces per 1,000 sq. ft. (where shared parking is available) or 7.5 spaces per 1,000 sq. ft. (where shared parking is not available)~~
~~Medical Cannabis Cultivation Center~~	~~1.17 spaces per 1,000 sq. ft.~~

~~Adult Use Cannabis Dispensing Organization~~	~~6 spaces per 1,000 sq. ft. (where shared parking is available) or 7.5 spaces per 1,000 sq. ft. (where shared parking is not available)~~
~~Adult Use Cannabis Graft Grower~~	~~6 spaces per 1,000 sq. ft. (where shared parking is available) or 7.5 spaces per 1,000 sq. ft. (where shared parking is not available) for dispensary portion of business plus 1.17 spaces per 1,000 sq. ft. for non-dispensary areas of business~~
~~All other Adult Use Cannabis Business Establishments~~	~~1.17 spaces per 1,000 sq. ft.~~

~~(Ord. No. 5804, 12/17/19; Ord. No. 5706, 7/10/18)~~

SECTION 19. That Section 28.7.050 of the Zoning Ordinance is hereby amended to read as follows:

Section 28.7.050 Parking Exemptions And Reductions.

* * *

(b) Shared Parking.

* * *

(3) Methodology. The number of parking spaces required under a shared parking arrangement must be determined in accordance with the following:

a. Multiply the minimum parking required for each individual use, as set forth in DGMC Section 28.7.030 by the percentage identified for each of the six (6) designated time periods in Table 7-2.
b. Add the resulting sums for each of the six (6) columns.
c. The minimum shared parking requirement is the highest sum among the six (6) columns resulting from the above calculations.

d. Select the time period with the highest total parking requirement and use that total as the shared parking requirement.

Table 7-2: Shared Parking Calculations.

	Weekday			Weekend		
Land Use	Midnight–7:00 a.m.	7:00 a.m. – 6:00 p.m.	6 p.m. – Midnight	Midnight–7:00 a.m.	7:00 a.m. – 6:00 p.m.	6 p.m. – Midnight
Office and Industrial	5%	100%	10%	0%	60%	5%
Lodging	100%	60%	90%	100%	65%	80%
Eating and Drinking Establishments /Brewing Facility	50%	70%	100%	45%	70%	100%
Religious Assembly	0%	10%	30%	0%	100%	30%
Assembly & Entertainment	10%	50%	100%	5%	80%	100%
Retail Sales & Commercial Service	5%	70%	90%	0%	100%	60%

* * *

~~(e) Electrical Vehicle Parking. For any development, one (1) parking space or up to five percent (5%) of the total number of required spaces, whichever is greater, may be reserved for use by electrical vehicle parking. The number of required motor vehicle parking spaces is reduced by one (1) space for every parking space that is dedicated for electrical vehicle parking.~~

SECTION 20. That Section 28.7.060 of the Zoning Ordinance is hereby amended to read as follows:

Sec 28.7.060 Bicycle Parking.

(a) Minimum Requirements. Bicycle parking spaces must be provided in accordance with the minimum ratios established in

Table 7-3: Minimum Bicycle Parking.

Categories	Minimum Bicycle Parking Spaces (% of Motor Vehicle Parking)
Apartment / Condo	None for first 9 vehicle spaces, then 10% or 2 spaces, whichever is greater.
Community Center	None for first 9 vehicle spaces, then 10% or 2 spaces, whichever is greater
Library	None for first 9 vehicle spaces, then 10% or 2 spaces, whichever is greater
Museum or Cultural ~~Center~~Facility	None for first 9 vehicle spaces, then 10% or 2 spaces, whichever is greater
Parks and Recreation	None for first 9 vehicle spaces, then 10% or 2 spaces, whichever is greater
School (Elementary~~,~~ ~~and~~ Junior High and Senior High)	None for first 9 vehicle spaces, then 10% or 2 spaces, whichever is greater
~~School (Senior High)~~	~~None for first 9 vehicle spaces, then 10% or 2 spaces, whichever is greater~~
Assembly and Entertainment	None for first 19 vehicle spaces, then 5% or 2 spaces, whichever is greater
~~Health club, fitness facility~~ Health and Fitness Services	None for first 9 vehicle spaces, then 10% or 2 spaces, whichever is greater
Studio~~,~~ Instructional ~~or~~ Services	None for first 19 vehicle spaces, then 10% or 2 spaces, whichever is greater
Eating and Drinking Establishment	None for first 19 vehicle spaces, then 5% or 2 spaces, whichever is greater
Financial Service	None for first 19 vehicle spaces, then 5% or 2 spaces, whichever is greater

Categories	Minimum Bicycle Parking Spaces (% of Motor Vehicle Parking)
Office	None for first 19 vehicle spaces, then 5% or 2 spaces, whichever is greater
Retail Sales	None for first 19 vehicle spaces, then 5% or 2 spaces, whichever is greater

SECTION 21. That Section 28.7.070(c) of the Zoning Ordinance is hereby amended to read as follows:

* * *

Sec 28.7.070 Location of Off-Street Parking.

(c) Downtown and Fairview. Parking is prohibited in the street yard of any lot located within a DC, DB, ~~or~~ DT, FC, FB or FT zoning district except that parking is allowed on approved driveways serving detached houses, attached houses and two-unit houses.

(d)(2) Location. Off-site parking areas must be located within a one thousand foot (1,000') radius of the use served by such parking, measured between the entrance of the use to be served and the outer perimeter of the farthest parking space within the off-site parking lot. Off-street parking shall be connected to the use served by such parking via private or public sidewalks. Off-site parking lots are allowed only in zoning districts that permit the principal use to be served by the off-site parking spaces, unless approved as a special use. See Figure 7-2.

Figure 7-2: Off-Site Parking Location

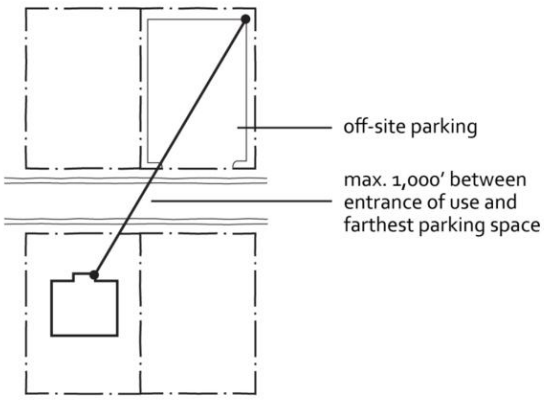

* * *

SECTION 22. That Section 28.7.100(b)(2) of the Zoning Ordinance is hereby amended to read as follows:

Sec 28.7.100 Parking Area Design.

* * *

(b)(2) Stall dimensions may be reduced by up to six inches (6") in width and length in commercial parking lots containing more than fifty (50) parking spaces or in attached house or apartment/condo ~~multi-family residential~~ developments if a parking study demonstrates that parking activity is projected at medium to low turnover conditions, defined as Class B or C by the Institute of Transportation Engineers (ITE), and that the typical parking space in such lot or structure will be occupied by no more than one (1) or two (2) different vehicles during the course of the business day. Stall size reductions are not allowed for parallel spaces.

SECTION 23. That Section 28.7.130(c) of the Zoning Ordinance is hereby amended to read as follows:

Sec. 28.7.130 Drive-Through and Drive-In Facilities.

* * *

(c) Stacking Spaces Required. Stacking lanes must be provided in accordance with the minimum requirements of Table 7-5

Table 7-5: Stacking Space Requirements.

Use	Minimum Number of Stacking Spaces Required
~~Bank/f~~Financial ~~institution~~Service	4 spaces per drive-through lane
Car wash (self-serve)	2 spaces per approach lane, plus 2 drying spaces at end of bay
Car wash (automatic)	10 spaces per approach lane, plus 1 drying space at end of bay and 1 additional space for any manual detailing/drying operations.
Vehicle repair/maintenance	2 per service bay (can be provided as parking spaces)
~~Gasoline pump~~ Fueling Station	~~2~~1 space~~s~~ per pump per side
Restaurant	8 total spaces, with at least 3 spaces between order and pick-up station
Other	3 spaces per lane, ordering station or machine

* * *

SECTION 24. That Section 28.8.010 of the Zoning Ordinance is hereby amended to read as follows:

Section 28.8.010 Purpose.

The landscaping and screening regulations of this Article establish minimum requirements for landscaping and screening. The regulations are intended to advance the general purposes of this ordinance and specifically to:

(a) enhance quality of life for residents and visitors;

(b) protect property values;

(c) enhance the quality and appearance of new development and

redevelopment projects;

(d) mitigate possible adverse impacts of higher intensity land uses abutting lower intensity land uses;

(e) promote the preservation, expansion, protection and proper maintenance of existing trees and landscaping;

(f) help ensure wise use of water resources;

(g) improve air quality;

(h) protect water quality and reduce the negative impacts of stormwater runoff by reducing impervious surface area and providing vegetated areas that filter and retain greater amounts of stormwater on site;

(i) moderate heat by providing shade; ~~and~~

(j) reduce the impacts of noise and glare~~.~~;

(k) enhance the ecological wellbeing of the community through enhanced biodiversity; and

(l) promote the planting of native plant species that provide natural habitat for pollinators and improve soil health.

SECTION 25. That Section 28.8.030(d) of the Zoning Ordinance is hereby amended to read as follows:

Section 28.8.030 Parking Lot Interior Landscaping.

* * *

(d) General

(1) Landscape material used to satisfy the parking lot interior landscaping requirements of this Section are subject to the landscape material and design regulations of DGMC Section 28.8.060.

(2) All landscaped islands and divider medians must ~~be crowned to~~ provide positive drainage or designed to comply with the Village's best

management practices for stormwater.

(3) At least ~~fifty percent (50%)~~seventy five percent (75%) of every landscape island and landscape divider median must be planted with live plant material, such as perennials, ground cover, ornamental grasses, or shrubs~~, or turf grass~~ to a maximum height of thirty inches (30~~"~~") at maturity. Any area not planted with live plant material shall contain organic, biodegradable mulch. Turf grass and impervious materials such as asphalt and concrete are prohibited in landscape islands and divider medians.

(4) Interior landscape islands and divider medians that meet the requirements of this Section that have a surface area of five hundred (500) square feet or more, as measured from the back of curb to back of curb, may be counted toward satisfying zoning district landscaped open space requirements.

(5) The installation of bioswales for landscaping and stormwater management purposes is encouraged within larger, continuous landscape islands. Installation of native, flood-tolerant plants is encouraged to ensure healthy plants within bioswales.

SECTION 26. That Section 28.8.040(b) of the Zoning Ordinance is hereby amended to read as follows:

Sec 28.8.040 Screening.

* * *

(b) Ground-mounted Mechanical Equipment. All ground-mounted mechanical equipment over thirty inches (30") in height must be screened from view by a fence, wall, dense hedge, or combination of such features providing at least eighty percent (80%) direct view blocking. Fencing expressly excludes chain link with vertical slats or woven mesh. The hedge, fence or wall must be at least as

tall as the tallest part of the equipment. The hedge must be this tall at the time of planting. See Figure 8-12.

(c) Roof-mounted Mechanical Equipment. Exterior roof access ladders, placed on an exterior facade, are expressly prohibited in the Village. Alternative ~~R~~roof-mounted mechanical equipment (e.g., air conditioning, heating, cooling, ventilation, exhaust and similar equipment, ~~but not~~excluding solar panels, wind energy or similar renewable energy devices) must be screened from ground-level view in one of the following ways (and as illustrated in Figure 8-13):

(1) a parapet that is as tall as the tallest part of the equipment;
(2) a screen around the equipment that is at least as tall as the tallest part of the equipment, with the screen providing at least eighty percent (80%) direct view blocking and which is an integral part of the building's architectural design; or
(3) an equipment setback from roof edges that is at least three feet (3') in depth for each one foot (1') ~~foot~~ of equipment height.

* * *

SECTION 27. That Section 28.8.060 of the Zoning Ordinance is hereby amended to read as follows:

Section 28.8.060 Landscape Material And Design.

(a) *Landscaping with Required Landscape Areas*. All required landscape areas must be sodded or seeded with turf grass or appropriate ground cover. Alternatives that comply with the Village's best management practices for stormwater are also allowed. Areas not required to be covered with live plant material must be covered with organic, biodegradable mulch. Limiting the amount of turf grass installed is encouraged.

(b) *Existing Trees and Vegetation*. Existing non-invasive shrubs and trees may be counted toward satisfying the landscaping and screening regulations of this Article if they are located within the subject area and they comply

with the plant height and size requirements of this Section.

(c) Plant Selection

(1) Trees and plants selected for required landscape areas must be well-suited to the microclimate and on-site soil conditions.

(2) Trees and plant material must comply with the specifications found in American Standards for Nursery Stock (ASNS).

(3) ~~Invasive species may not be used to meet landscape requirements~~. Invasive species listed in the current Illinois Exotic Weeds Act (525 ILCS 10/1 et. al.) are prohibited from installation.

(4) At least eighty percent (80%) of all plant materials shall be species that are native to northeastern Illinois to promote biodiversity and ecological resistance.

(5) For each plant group (canopy tree, ornamental tree, evergreen tree, etc.) there shall be no more than twenty-five percent (25%) of the same genus.

~~(4)~~(6) All plant materials are subject to the approval of the ~~Community Development Director~~Village Forester.

(d) Trees

(1) Ornamental. Ornamental trees used to satisfy the requirements of this Article must be at least ~~four feet (4')~~six feet (6') in height at time of installation.

(2) Shade. Shade trees used to satisfy the requirements of this Article must be a minimum two ~~and one half~~ inch (2~~.5~~") caliper at time of installation.

(e) Shrubs. Shrubs used to satisfy the requirements of this Article must be at least eighteen inches (18") in height at time of installation.

(f) Ornamental Grasses and Perennials. Ornamental grasses and perennials used to satisfy the requirements of this Article must be at least twelve

inches (12") ~~inches~~ in height at time of installation.

(g) Curbs and Vehicle Barriers. Landscaped areas in or abutting parking lots must be protected by concrete curbing, anchored wheel stops, or other durable barriers approved by the Community Development Director. ~~Alternative b~~Barrier designs that provide improved infiltration or storage of stormwater are permitted~~encouraged~~. Curbs protecting landscape areas may be perforated, and encouraged to have gaps or otherwise be designed to allow stormwater runoff to pass through them.

(h) Installation

(1) All landscaping must be installed in a sound manner and in accordance with accepted landscape planting practices.

(2) Newly planted trees may not be staked or guyed unless they are unable to stand upright without support. Any staking and guying materials must be removed within one (1) year of installation.

(i) Maintenance. The property owner, occupant, tenant and respective agent of each, if any, are jointly and severally responsible for the maintenance and protection of all required landscaping, in accordance with all of the following regulations:

(1) Landscaping must be kept reasonably free of visible signs of insects and disease and appropriately irrigated to enable landscaping to exist in a healthy growing condition.

(2) Landscaping must be mowed or trimmed in a manner and at a frequency appropriate to the use of the material and species on the site so as not to detract from the appearance of the general area. Growth of plant material at maturity must be considered where future conflicts such as view, signage, street lighting, utilities and circulation might arise.

(3) All landscaping must be maintained to minimize property damage and public safety hazards, including removal of invasive species,

dead or decaying plant material, and removal of low-hanging branches next to sidewalks and walkways obstructing street lighting.

(4) All pruning must be done in accordance with ANSI A300 (part 1) "Standards for Tree Care Operations—Pruning." Tree topping is prohibited. Crown reduction pruning may be used instead to reduce the height of a tree when necessary. Topped trees may not be counted toward tree planting requirements.

(5) Property owners are encouraged to manage, control or eradicate all noxious weed species currently identified by the Illinois Department of Natural Resources such that they prevent seed set and active spread beyond their property lines.

(6) On commercial properties, only drip irrigation is permitted in non-turf grass areas.

~~(5)~~(7) Failure to maintain landscaping is a violation of this ordinance.

SECTION 28. That Section 28.8.080 of the Zoning Ordinance is hereby added as follows:

Sec 28.8.080 Landscaping Requirement for Residential Development.

All applications for a building permit for the construction of a new detached house, attached house or two-unit house shall comply with the provisions in DGMC Section 7.2300.

SECTION 29. That Section 28.9.020 of the Zoning Ordinance is hereby amended to read as follows:

Sec 28.9.020 Prohibited Signs And Sign Characteristics.

The following are expressly prohibited under this ordinance:

a) any sign or structure that constitutes a hazard to public health or safety;

b) any signs attached to utility, traffic signal poles, light poles, or standards except for governmental signs;

c) signs, that by their color, location, or design resemble or conflict with traffic control signs or signals;

d) except for governmental signs erected by, or on behalf of, the unit of government having jurisdiction, no sign may be located on the public right-of-way, or affixed to or upon public property. This prohibition includes any sidewalk, parkway, crosswalk, curb, curbstone, street lamppost, hydrant, tree, shrub, tree stake or guard, electric light or power, CATV, telephone or telegraph system, fire alarm, lighting system, public bridge, drinking fountain, trash receptacle, street sign or traffic sign;

e) portable signs, except for sandwich board signs that are allowed in the DC, DB, DT, FC, FB or FT zoning districts;

f) vehicle signs when the vehicle is not licensed, insured or operational;

g) advertising off-premise signs;

h) moving signs;

i) ~~LED and~~ flashing signs;

j) signs with bare bulb illumination, except for marquees located in the DC, DB, DT, FC, FB or FT zoning districts;

k) attention-getting devices;

l) signs containing exposed gas tubing, exterior to the building, including argon and neon;

m) roof signs;

n) box-type signs in the DC, DB, DT, FC, FB or FT zoning districts;

o) any sign that advertises, identifies, or pertains to a business no longer conducted, or a product no longer sold, on the premises where such sign is located, within the previous thirty (30) days;

p) any sign painted directly on a wall, roof, or fence;

q) any sign placed or attached to a telecommunications tower, pole or antenna;

r) signs containing manual changeable copy consisting of more than two (2) lines, except that fueling stations, governmental agencies, schools and religious assembly uses have up four (4) lines of manual changeable copy. The changeable copy surface area is included in the total surface area allowed;

~~s) signs containing electronic changeable copy/message board;~~

~~t)~~ s) single pole signs with a base of less than two feet (2') in width; and

~~u)~~ t) any other sign not expressly permitted in this Article.

SECTION 30. That Section 28.9.050 of the Zoning Ordinance is hereby amended to read as follows:

Sec 28.9.050 Sign Regulations Generally.

The regulations of this Section apply to signs in all areas of the Village except the DC, DB, DT, FC, FB and FT zoning districts.

a) *Maximum Total Sign Area*. The maximum allowable sign area may not exceed one and one half (1.5) square feet per linear foot of tenant frontage, plus any signs expressly excluded from maximum sign area calculations. Buildings set back more than three hundred feet (300') from the abutting street right-of-way are allowed a maximum allowable sign area of two (2) square feet per linear foot of tenant frontage, plus any allowed excluding menu boards, window and temporary signs. In no case,

may a single tenant exceed three hundred (300) square feet in total sign surface area.

b) *Monument Signs and Shingle Signs*. Unless otherwise expressly stated, each lot is allowed either one (1) monument sign or one (1) shingle sign.

(1) Monument Signs

a. Monument signs are limited to a maximum of two (2) sign faces and are subject to the height and area limitations of Table 9-1.

Table 9-1: Monument Sign Height and Area Regulations

	Lot Size		
Monument Sign Regulations	Less than 100 ft. Lot Width	100–259 ft. Lot Width	260 ft. or Greater Lot Width and at Least 2.5 Acres in Area (B-3 District Only)
Maximum Height (feet)	8	10	15
Maximum Area (sq. ft.)	24	36	60

b. Monument signs must be set back at least ten feet (10') from all street rights-of-way and at least twenty-five feet (25') from all other lot lines. Monument signs that are greater than ten feet (10') in height and thirty-six (36) square feet in size must be set back at least one hundred feet (100') from interior (non-street) lot lines.

c. Monument signs are subject to the intersection visibility regulations of DGMC Section 28.10.020.

d. Monument signs must display the address number of the subject property with numbers or characters between eight inches (8") and ten inches (10") in height. Address numbers are excluded when calculating the area of the monument sign.

e. Lots with more than one (1) street frontage are allowed two (2)

monument signs, provided the signs are located on different street frontages and separated by a minimum distance of one hundred feet (100'). Only one (1) monument sign may be a digital copy sign and is subject to the provisions of DGMC Section 28.9.070(f).

f. The base of all monument signs must be landscaped. Every permit application for a monument sign must be accompanied by a landscape plan demonstrating compliance with the following standards:

1. Signs must be surrounded by a landscaped area of at least three feet (3') in width, measured outward from the face of the sign.

2. Landscaping within the required landscape area must consist of shrubs, evergreens, perennial or annual flowers, ornamental grasses, vegetative ground cover or some combination of such live plants. Sodded, seeded, mulched or rocked areas may not be counted as meeting these monument sign landscaping requirements.

3. Monument sign landscaping is subject to the landscape maintenance provisions of DGMC Section 28.8.060(i).

(2) Multi-tenant Shopping Centers

a. Multi-tenant shopping centers located on lots with more than five hundred feet (500') of street frontage are allowed two (2) monument signs, provided the signs are separated by a minimum distance of two hundred feet (200'). Such signs may not exceed fifteen feet (15') in height or sixty (60) square feet in area and must contain the names of more than one (1) tenant. A shopping center tenant's panel sign is not counted toward allowable sign surface area. Only one (1) shopping center sign may be a digital copy sign and is subject to the provisions of DGMC Section 28.9.070(f).

b. Multi-tenant shopping centers located on lots with one hundred feet (100') to five hundred feet (500') of street frontage are allowed

a maximum of one (1) monument sign. The sign may not exceed ten feet (10') in height or thirty-six (36) square feet in area and must contain the names of more than one (1) tenant. A shopping center tenant's panel sign is not counted toward allowable sign surface area.

c. Multi-tenant shopping centers located on lots with less than one hundred feet (100') of street frontage age are allowed a maximum of one monument sign. The sign may not exceed eight feet (8') in height or twenty-four (24) square feet in area and must contain the names of more than one (1) tenant. A shopping center tenant's panel sign is not counted toward allowable sign surface area.

(3) Tollway Corridor. Signs on lots abutting the right-of-way of I-88 or I-355 are subject to all regulations of this Article, with the following exceptions:

a. In addition to the monument sign otherwise allowed by DGMC Section 28.9.050(b), one (1) additional monument sign is allowed for lots with a minimum frontage of one hundred feet (100') along the tollway or on IDOT frontage along the tollway.

b. The additional monument sign must be placed adjacent to the tollway and may not exceed two hundred twenty-five (225) square feet in area or twenty feet (20') in height. The additional monument sign will not be counted in calculating the lot's total sign area.

c. Monument signs must be separated by a minimum distance of thirty feet (30') from any existing tollway signs.

d. Digital copy signs are expressly prohibited as a Tollway Corridor monument sign.

SECTION 31. That Section 28.9.070 of the Zoning Ordinance is hereby amended to read as follows:

Sec 28.9.070 Special Sign Types.

* * *

(f) Digital Copy Signs.

(1) Where Allowed. Digital copy signs are permitted in all Business and Employment Districts (B-1, B-2, B-3, O-R, O-R-M, M-1 and M-2) and Institutional Districts (INP-1 and INP-2).

(2) A digital copy sign shall be constructed as a monument, freestanding or multi-tenant shopping center sign type only.

(3) The digital sign area shall comply with sign area regulations identified in DGMC Section 28.9.050.

(4) The digital sign height shall comply with sign regulations identified in DGMC Section 28.9.050.

(5) Only one (1) monument, freestanding or multi-tenant shopping center sign may be a digital copy sign, per DGMC Section 28.9.050.

(6) The setback of digital copy signs shall comply with regulations identified in DGMC Section 28.9.050. Additionally, no digital copy sign shall be located within 100 feet of a principal residential structure, regardless of the zoning district that the principal residential structure is located in.

(7) Digital copy signs must be oriented perpendicular to the roadway.

(8) The area immediately adjacent to a digital copy sign shall be landscaped in accordance with regulations identified in DGMC Section 28.9.050(b)(1)(f).

(9) Only high resolution, full color electronic displays are allowed. Digital copy signs shall be maintained in 'like new' operating condition, or cease operation of the sign.

(10) Operational Standards

a. Digital copy signs shall have a static display only. Scrolling, fading, flashing, animation, or video is prohibited.

b. Sound from digital copy signs is prohibited.

c. Messages must be displayed for a minimum of ten (10) seconds.

d. The message change shall be a full screen replacement without fading, motion or other action techniques.

e. All digital copy sign components shall be in full color with a minimum pitch resolution of 16 millimeter spacing or better.

f. Digital copy signs must use auto-dimming photocell technology or a similar device that automatically adjusts the display brightness based on ambient lighting conditions. Brightness shall be limited to 0.3 footcandles maximum above ambient lighting conditions at a distance of 100 feet from each face of the sign. Manufacturer's product data and specification for the digital copy sign, including written certification verifying auto-dimming function set to 0.3 footcandles maximum above ambient lighting conditions shall be provided.

g. In case of a mechanical failure, the digital copy sign shall be designed to default to a static display.

(g) Marquee Signs

(1) In lieu of a permitted wall sign, one (1) marquee sign is permitted in any zoning district when associated with an allowed cinema or live music entertainment venue use.

(2) A marquee sign may contain digital copy.

(3) The total sign area of a marquee sign shall not exceed three (3) square feet per one (1) lineal foot of tenant frontage or three-hundred (300)

square feet, whichever is less. The total surface area of each face of the marquee sign is measured for the purposes of measuring total marquee sign area. The area of permanent lettering on a marquee sign shall be counted in determining sign area for the marquee sign. Any permanent lettering that is attached to the marquee may not extend more than twelve (12) inches from the vertical plane of the marquee to which it is attached.

(4) A marquee sign shall comply with the digital copy sign operational standards shown in DGMC Section 28.9.070(f)(7).

(5) A marquee sign must be placed to allow at least eight feet (8') of vertical clearance above the ground directly beneath the sign.

(6) A marquee sign may extend no more than five (5) feet from the building wall into the public right-of-way, subject to an Encroachment License Agreement approved by the Village Attorney, but no closer than one (1) foot from any curb line.

SECTION 32. That Section 28.10.010 of the Zoning Ordinance is hereby amended to read as follows:

Sec 28.10.010 Fences.

(a) General. The general regulations of this subsection apply to all fences.

(1) Applicability. All fences, including plants and walls in the nature of a fence, must be erected and maintained in conformance with the requirements of this Section.

(2) Permits Required. It is unlawful to erect or alter any fence within the Village unless a permit has been issued by the Community Development Director. A written application for a fence permit, including applicable fees as established in the User-Fee, License & Fine Schedule must be filed with

the Community Development Department. A fence permit issued under this Section is valid for a term of six (6) months.

(3) Public Safety. Fences may not be constructed or maintained in any way that would impair public protection services or impair public safety by obstructing the vision of persons using the street, sidewalks or driveways.

(4) Structural Elements. All fences must be constructed so that fence posts and structural elements are located on the side of the fence facing the property being enclosed.

(5) Open-Design Fences. Open design fences must be constructed in such a manner that no post or vertical and horizontal element exceeds a width of six inches (6"), and the open area is not less than fifty percent (50%) of the closed area, with the open area distributed uniformly over the entire fence surface. Open-design fences include split rail, post and board and similar designs, expressly excluding chain-link (with slats), shadow box and woven mesh fences.

(6) Solid-Design Fences. Shall be a continuous, unbroken design with no open spaces between material, which may include, post and board, shadowbox and similar designs. Chain-link fences with vertical slats or woven mesh are expressly excluded.

* * *

(2) Side and Rear Yards. The regulations of this subsection apply to fences in the side and rear yards of lots located in R districts.

(a) Fences, including chain-link and woven mesh designs, are permitted in side and rear yards and required setbacks. Fences in side and rear yards may not exceed six feet (6') in height. In residential districts abutting nonresidential districts, fences of up to eight feet (8') in height and ~~closed in design~~solid-design fences may be erected only in the side and rear yards of the residential district properties that abut the nonresidential districts. On double-frontage lots, when the rear of any principal

structure located on the lot faces a street, and all directly abutting lots share this layout, the yard along that street frontage is considered a rear yard for purposes of these fence regulations. On double-frontage lots, when the rear of any principal structure located on the lot faces a street, and one or more directly abutting lots has the front of a principal structure that faces the same street, the fence must adhere to the yard requirements of the front facing principal structure.

(b) On lots where one street frontage is along a street and the opposite frontage is along an alley, when the rear of any principal structure located on the lot faces a street, and the front of the principal structure faces an alley and one or more directly abutting lots has the same layout, the yard along the public alley is considered a street yard for purposes of these fence regulations; while the yard facing the street is considered a rear yard.

~~b~~. (c) On corner lots with three (3) lot lines abutting a street, fences up to six feet (6') in height, including chain-link and woven mesh designs, are permitted only within the two (2) street-facing side yard areas located from the rear building line to the rear lot line. Any fences outside this area are subject to a maximum height limit of four feet (4').

* * *

SECTION 33. That Section 28.10.030 of the Zoning Ordinance is hereby amended to read as follows:

Section 28.10.030 Outdoor Lighting.

(a) *Purpose*. The outdoor lighting standards of this Article are intended to protect the public health and general welfare, reduce light pollution, minimize unnecessary upward light emissions (skyglow), limit light trespass onto adjacent properties, protect nocturnal wildlife habitats, and reduce energy waste, by controlling the adverse impacts of glare and light trespass associated with poorly shielded or inappropriately directed

lighting fixtures.

(b) Applicability. Unless otherwise expressly exempted, the regulations of this Article apply to all uses.

(c) Exemptions. The following are expressly exempt from the outdoor lighting regulations of this Article:

(1) temporary ~~holiday~~seasonal decorative light displays installed for no more than ninety (90) consecutive days;

(2) outdoor light fixtures producing light directly by the combustion of fossil fuels, such as, kerosene lanterns or gas lamps;

(3) landscape accent lighting;

(4) Village street lights;

(5) illumination of official government flags; and

(6) construction and emergency lighting used by construction workers or police, firefighting, or medical personnel, provided the lighting is temporary and is discontinued immediately upon completion of the construction work or abatement of the emergency requiring the lighting.

(7) Lighting for outdoor athletic fields on public property and temporary uses.

(d) Exterior Lighting Plan. An outdoor lighting plan must be prepared by a professional lighting consultant and submitted to the Community Development Director for approval. The lighting plan must be reviewed to determine whether the proposed outdoor lighting complies with the regulations of this Section. The plan must include at least the following information:

(1) a photometric study and data on the types of lighting fixtures to be used;

(2) location of and catalog cut-sheet data for all proposed light fixtures, including those used for site lighting, canopy lighting and exterior building lighting;

(3) calculations showing contours of individual illumination values in foot-candles. The contours must include property lines and at least five feet (5') beyond; and

(4) a summary calculation table showing average foot-candles, minimum foot-candles, maximum foot-candles, average-minimum uniformity ratio, lumens per net acre, correlator color temperature for all luminaries and foot-candles at property lines and at least five feet (5') beyond.

(e) General Regulations and Standards

(1) Flashing, revolving, or intermittent exterior lighting visible from any property line or street is prohibited.

(2) High-intensity light beams, such as outdoor searchlights and lasers are prohibited.

(3) All luminaires emitting more than one thousand (1,000) lumens shall be zero uplight, except for luminaires that are used for flags, façade or sign illumination which are shielded and aimed, such that their direct light emission is contained to the architectural target.

(4) The total light output from all luminaires used for outdoor lighting on any lot of record in a non-residential zoning district shall not exceed one hundred thousand (100,000) lumens per net acre. Lighting installations located under canopies shall only contribute fifty percent (50%) toward this limit.

(5) All new and replacement outdoor luminaires shall have a Correlated Color Temperature (CCT) not to exceed three thousand (3,000) Kelvin.

(6) Fixtures certified under the DarkSky Approved Luminaires or DesignLights Consortium's (DLC) Light Usage for Night Applications (LUNA) are encouraged.

(f) Glare. All outdoor lighting must be directed, shaded, shielded, or otherwise located and designed to minimize perceived glare on adjacent properties and streets.

* * *

(h) Light Fixture Mounting Height. Parking lot light fixtures in R zoning districts may not exceed twenty feet (20') in height. Parking lot light fixtures in nonresidential districts may not exceed thirty feet (30') in height. All parking lot lighting shall direct all light downward with no uplighting.

* * *

SECTION 34. That Section 28.11.020 of the Zoning Ordinance is hereby amended to read as follows:

Section 28.11.020 Non-Conforming Lots.

(a) Description. A nonconforming lot is a lot that was lawfully created in accordance with lot area and lot width regulations in effect at the time of the lot's establishment but that does not comply with currently applicable lot area or lot width regulations.

(b) Use of and Building on Nonconforming Lots

(1)A nonconforming lot in an R district ~~may be used improve~~lee ~~with a single detached house~~ ~~may be improved with any residential use allowed in the subject zoning district~~ may be improved with a single family detached house or accessory structure. A two-unit house or attached house may also be allowed pursuant to compliance with minimum lot area per dwelling unit requirements per Table 2-2 in DGMC Section 28.2.030~~,~~. All uses are subject to compliance with applicable lot and building regulations other than those pertaining to lot area and lot width, provided that when a structure is constructed across common lot lines of

two (2) or more contiguous nonconforming lots that are held in common ownership, the lots must be consolidated in order to meet or come closer to meeting applicable minimum lot area and lot width requirements. Except that lot consolidations are not required for decks, front porches and stoops or when:

a. an addition does not exceed three hundred fifty (350) square feet; or

b. an addition does not include the installation of a foundation, footers or piers; or

c. the construction of an accessory structure is less than eight hundred (800) square feet.

(2) Nonconforming lots in nonresidential districts may be improved with any use allowed in the subject zoning district, provided that:

a. the lot area is ~~not less than~~ seventy-five percent (75%) or more of the minimums required in the subject zoning district, or the lot width is at least ~~not less than~~ fifty feet (50') and the lot area is ~~not less than~~ at least seven thousand five hundred (7,500) square feet;

b. if the zoning allows a variety of uses or a variety of intensities of uses and one or more uses or intensities would comply with applicable lot area and lot width standards, while others would not, then only the uses or intensities that comply with applicable standards are permitted.

c. when a structure is constructed across common lot line(s) of two (2) or more contiguous nonconforming lots are held in common ownership, the lots must be consolidated in order to meet or come closer to meeting applicable minimum lot area requirements.

(3) All flag lots lawfully created before March 18, 2008 are deemed nonconforming lots. In addition to complying with the other nonconforming lot provisions of this Section, nonconforming flag lots are subject to the following additional requirements:

a. the pole of the flag lot must be at least twenty feet (20') in width;

b. an access corridor, including a paved surface with a width of at least ten feet (10'), must be maintained along the entire length of the pole. No encroachments that would interfere with emergency vehicle access are allowed within this access corridor;

c. the street setback must be measured from a line parallel to the street where the lot meets the minimum width requirement of the subject zoning district;

d. the address of the flag lot must be clearly displayed within three feet (3') feet of the property line adjacent to the public street and in a manner that clearly differentiates the flag lot from abutting property; and

e. if there is no fire hydrant located within sixty feet (60') of the street property line of the pole section of the flag lot, a fire hydrant must be installed at the property owner’s expense. If a new hydrant is required, it must be operational prior to issuance of an occupancy permit. The fire department may, in its sole discretion, permit the property owner to install a dry-system standpipe on the flag lot property instead of requiring a new hydrant to be installed.

(4) All lots created by lot split before May 16, 2006 may be improved provided any such improvement complies with the lot and building regulations of the subject zoning district, provided that:

a. the lot area and lot width are not less than seventy-five percent (75%) of the minimums required in the subject zoning district; or

b. the lot width is not less fifty feet (50') and the lot area is not less than seven thousand five hundred (7,500) square feet.

(5) Lawfully established buildings and improvements on nonconforming lots may be used, maintained, repaired and replaced, provided that the amount, quantity or degree of any existing nonconformity is not increased and no new nonconformity is created.

SECTION 35. That Section 28.12.050 of the Zoning Ordinance is hereby amended to read as follows:

Sec 28.12.050 Special Uses.

* * *

(i) Lapse of Approval

(1) The applicant may submit, and the Village Council may approve, as part of the ordinance authorizing the special use, a maximum 2-year schedule for establishing the approved special use. If such a schedule is not approved by the Village Council, the approved special use will lapse and have no further effect one (1) year after it is approved by the Village Council, unless:

a. a building permit has been issued (if required);
b. a certificate of occupancy has been issued; or
c. the special use has been lawfully established.

(2) The Village Council is authorized to extend the expiration period for good cause on up to two (2) separate occasions, by up to six (6) months each. Requests for extensions must be submitted to the Community Development Director and forwarded to the Village Council for a final decision.

(3) A special use also lapses upon revocation of a building permit or a certificate of occupancy for violations of conditions of approval or upon

expiration of a building permit to carry out the work authorized by the special use.

(4) If any special use is discontinued or not in operation for a continuous period of six (6) months or more, the special use for such use is void, and such use may not be reestablished unless and until a new special use is obtained in accordance with the procedures of this Section.

(5) A special use granted in conjunction with the approval procedures set forth in DGMC Section 28.12.040 for Planned Unit Developments does not expire.

* * *

(k) Amendments. Amendments to approved special uses may be approved in accordance with the following requirements. The special use amendment procedures may not be used to vary or modify zoning ordinance standards.

(1) Minor Amendments

a. The Community Development Director is authorized to approve the following minor amendments to approved special uses:
    1. any amendments expressly authorized as minor amendments at the time of special use approval;
    2. the addition of customary accessory uses and structures; and
    3. changes to the development site or to structures necessitated by engineering, architectural or physical limitations of the site that could not have been foreseen at the time the special use permit was approved and that are not otherwise classified as major amendments pursuant to DGMC Section 28.12.050(k)(2).

b. Applications for minor amendments to approved special uses must be filed in a form established by the Community Development Director. If no action is taken on the minor amendment application within twenty (20)

days of filing of a complete application, the minor amendment is deemed denied.

(2) Major Amendments

a. All of the following constitute major amendments to approved special uses:

1. an increase in overall building coverage by more than five percent (5%);
2. an increase in building height by more than ten percent (10%) or five feet (5'), whichever is less;
3. ~~an overall reduction in the amount of common open space or landscaping~~ an overall reduction in the amount of usable open space, common open space or landscaping by more than five percent (5%);
4. a reduction in off-street parking by more than ten percent (10%) or one space, whichever results in a greater reduction;
5. a change in the vehicle circulation pattern that would increase points of access, change access to another street or increase projected traffic volumes; and
6. any combination of three (3) or more minor changes that were not expressly authorized by the approved special use permit.

b. Major amendments to an approved special use must be processed as a new special use application, including all requirements for fees, notices and public hearings.

* * *

SECTION 36. That Section 28.14.080 of the Zoning Ordinance is hereby amended to read as follows:

Sec. 28.14.080 Building Coverage.

Building coverage is measured as the area of the lot that is occupied by principal and accessory buildings and by structures with a surface area of more than four (4) square feet and a height of eighteen inches (18") or more, including pergolas and pools. All areas beneath a roof are counted for purposes of measuring building coverage, except on FT or R-zoned lots with a lot width of sixty feet (60') or less, detached garages, Accessory Dwelling Units~~Extended Family Accessory Housing~~ or Home Occupation units in the rear yard and rear-loading attached garages with a building footprint of five hundred (500) square feet or less are not counted towards overall building coverage provided that the detached garage, Accessory Dwelling Units~~Extended Family Accessory Housing~~ or Home Occupation units in the rear yard or the rear-loading attached garage is the only garage or unit on the subject property. If the building footprint for the previously listed uses exceeds five hundred (500) square feet, it is no longer exempt from the building coverage calculation.

SECTION 37. That Section 28.14.100(b) of the Zoning Ordinance is hereby amended to read as follows:

Sec. 28.14.100 Setbacks.

* * *

Table 14-1: Permitted Yard Obstructions

Obstruction/Projection	Permitted in these Yards		Minimum Setback/Maximum Encroachment into required setback		
	Corner	Street	Side	Rear	
A/C units, generators, compressors, transformers, associated equipment,	No	No[1]	Yes	Yes	~~10 ft. min. setback in R-1 7 ft. min. setback in R-2 6 ft. min. in R-3, R-5, R-5A, R-6 5 ft. min. setback in all other~~

Residential Energy Storage System Equipment, BMWES equipment, FSWES equipment, rainwater collection and geothermal equipment (ground-mounted)					~~districts~~ 5 foot minimum setback in R-4 district. 6 foot setback in all other districts. See also DGMC Section 28.6.200.
Air conditioner (window unit only)	Yes	Yes	Yes	Yes	No setback required
Antenna, amateur radio	No	No	No	Yes	Ground mounted only; 5 foot~~.~~ Minimum~~,~~ setback in R-4 district. 6 foot~~.~~ minimum~~.~~ setback in all other districts
Antenna, receive-only and satellite dish	Yes	Yes	Yes	Yes	
Arbor, pergola or trellis	Yes	Yes	Yes	Yes	5 foot~~.~~ Minimum. setback in R-4 district. 6 foot~~.~~ minimum~~.~~ setback in all other districts
Architectural building features (e.g., sills, belt courses, cornices, wing walls)	Yes	Yes	Yes	Yes	No setback in DB, DC, ~~FC~~ FB and FC~~B~~. 1.5 foot~~.~~ maximum~~.~~ encroachment if setback is < 6 foot~~.~~ 2 foot~~.~~ maximum~~.~~ encroachment if setback is ≥ 6 foot~~.~~
Awning, canopy architectural light shelf or solar shading device	Yes	Yes	Yes	Yes	1.5 foot~~.~~ maximum~~.~~ encroachment if setback is < 6 foot~~.~~ 2 foot~~.~~ maximum~~.~~ encroachment if setback is ≥ 6 foot~~.~~ (nonresidential districts - 2.5 foot~~.~~ maximum~~.~~ encroachment in street setback)

Balcony	Yes	Yes	Yes	Yes	Must meet required district street and side yard setbacks. 10 foot. maximum. encroachment in rear yard.
Basketball standards and backboards	Yes	Yes	Yes	Yes	
Bay window (1st floor only; with or without foundation)	Yes	Yes	Yes	Yes	Street setback - 1.5 foot. maximum. encroachment. Side setback - 1.5 foot. Maximum. encroachment if setback is < 6 foot. or 2 foot. maximum. encroachment if setback is ≥ 6 foot. Rear setback - 2.5 foot. maximum. encroachment
Bicycle Parking	Yes	Yes	Yes	Yes	5 foot. minimum. setback in R-4 district. 6 foot. minimum. setback in all other districts
Breezeway	No	No	No	Yes	10 foot. maximum. Encroachment
Chimney	Yes	Yes	Yes	Yes	1.5 foot. maximum. encroachment if setback is < 6 feet. . 2 foot. maximum. encroachment if setback is ≥ 6 feet.
Clothesline	No	No	Yes	Yes	5 foot. minimum. setback
Compost pile or container (See Chapter 13 of this Code)	No	No	Yes	Yes	5 foot. min. setback in R-4 district. 6 foot. minimum. setback in all other districts
Deck or patio, uncovered and open-	Yes	Yes	Yes	Yes	5 foot. maximum. encroachment in street setback. 5 foot. minimum.

air (see also “porch,” below) [2]					setback in side and rear property line
Dog house or dog run	No	No	No	Yes	No setback in DB, DC, FBC and FCB districts. 5 foot. min. setback in R-4 district. 6 foot. minimum. setback in all other districts
Driveway or uncovered walk	Yes	Yes	Yes	Yes	No setback in DB, DC, FC FB and FCB districts. 1 foot. minimum. (interior) or rear setback
Eaves and gutters	Yes	Yes	Yes	Yes	In street setback and rear setback - 2.54 foot. maximum. encroachment. In side setback - 2 foot. maximum. encroachment
Electric vehicle charging equipment	Yes	Yes	Yes	Yes	In front and rear - 2.5 foot. maximum. encroachment. In side - 2 foot. maximum. encroachment . See also DGMC Section 28.6.210.
Fence	Yes	Yes	Yes	Yes	See also DGMC Section. 10.010
Fire escape (open or lattice enclosed, fireproof outside stairways)	Yes	Yes	Yes	Yes	2 foot. maximum. Eencroachment
Fireplace, fire pit, outdoor cooking/kitchen areas (See Chapter 13 of this Code)	Yes[3]	No	Yes	Yes	5 foot. minimum. setback in R-4 district 6 foot. minimum. setback in all other districts. Must meet required R district street setback in corner yards.
Flag pole	Yes	Yes	Yes	Yes	Equal to the height of the pole; no maximum.

					encroachment of flag beyond lot line.
Garage (detached)[4]	No	No	Yes	Yes	5 foot. min. setback in R-4 district. 6 foot. minimum. setback in all other districts
Garden features (e.g., cold frames, hoop houses, greenhouses)	No	No	Yes	Yes	5 foot. minimum. setback in R-4 district. 6 foot. minimum. setback in all other districts
Gazebo	Yes	No	Yes	Yes	5 foot. minimum. setback in R-4 district. 6 foot. minimum. setback in all other districts
Hot Tub (and associated equipment)	Yes[3]	No	Yes	Yes	10 foot. minimum. setback in R-1 and R-2 Districts. 7 foot. minimum. setback in all other R districts. Must meet required R district street setback in corner yards.
Parking, open	Yes	Yes	Yes	Yes	See also DGMC Section 28.7.070
Playground equipment & playhouses (excluding equipment located on public parks and playgrounds or on school or day care center playgrounds, tot lots)	Yes[3]	No	Yes	Yes	5 foot. minimum. setback in R-4 district. 6 foot. minimum. setback in all other districts. Must meet required R district street setback in corner yards.
Porch, covered and open on at least 3 sides (see also “deck,” above)	Yes	Yes	Yes	Yes	5 foot. maximum. encroachment in street setback and rear setback (See also DGMC Section 28.14.100(c)). Must meet

					required district side yard setbacks.
Shed, carport or storage structure	No	No	Yes	Yes	5 foot- minimum- setback in R-4 district. 6 foot- minimum- setback in all other districts.
Sign	Yes	Yes	No	No	See DGMC Article IX
Solar Car Canopy in DT, FT, and Residential Zoning District	No	No	Yes	Yes	5-foot minimum setback in R-4 district. 6-foot minimum setback in all other district.
Solar Car Canopy in Non-Residential Zoning District	Yes	Yes	Yes	Yes	Principal building setbacks apply.
Solar panel and equipment (building-mounted)	Yes	Yes	Yes	Yes	1.5 foot- maximum- encroachment if setback is < 6 foot. 2 foot- maximum- encroachment if setback is ≥ 6 feet.
Solar panel and equipment (ground-mounted)	No	No	Yes	Yes	2 foot- maximum- encroachment in side setback; 10 foot- maximum- encroachment in rear setback. See also DGMC Section 28.6.010(m).
Sport courts & accessory lighting	No	No	Yes	Yes	5 foot- minimum- setback in R-4 district. 6 foot- minimum- setback in all other districts.
Sports equipment	No	No	Yes	Yes	5 foot- minimum- setback in R-4 district. 6 foot- minimum- setback in all other districts.
Steps (for access to building or lot; max. 4 feet above grade)	Yes	Yes	Yes	Yes	No setback in DB, DC, ~~FC~~ FB and FCB districts. 1 foot- minimum- setback

Swimming pool (in-ground & above-ground and associated equipment)	No	No	Yes	Yes	10 foot- minimum- setback in R-1 and R-2 districts. 7 foot- minimum- setback in all other R districts.
Vegetable Garden	Yes	Yes	Yes	Yes	No setback required
Walkway (covered)	No	No	No	No	In residential districts - principal building setbacks apply. In nonresidential districts - no side or rear setback required
Wall	Yes	Yes	Yes	Yes	See also DGMC Section 28.10.010
Wall, retaining	Yes	Yes	Yes	Yes	No setback in DB, DC, ~~FC~~ FB and FCB districts. 1 foot- minimum- setback.
Yard features (e.g., ornamental light standards, anchored lawn furniture and decorations, sundials, statues, bird baths, ponds, sculptures, seat walls, etc.)	Yes	Yes	Yes	Yes	No setback in DB, DC, F~~C~~B and FCB districts. 5 foot- minimum- setback in R-4 district. 6 foot- minimum- setback in all other districts
Wheelchair lifts and ramps that meet federal and state accessibility standards	Yes	Yes	Yes	Yes	1 foot- minimum- setback
Window wells	Yes	Yes	Yes	Yes	1.5 foot- maximum- encroachment if setback is < 6 feet. 2 foot- maximum- encroachment if setback is ≥ 6 feet.

* * *

Section 38. That Section 28.14.030(b) of the Zoning Ordinance is hereby amended to read as follows:

Sec 28.14.130 Height.

* * *

(b) Exceptions

(1) Lawfully established parapet walls, chimneys, elevators bulkheads, stair enclosures (without programmable space), equipment penthouses, cooling towers, monuments, water towers, stacks, flag poles, stage towers and scenery lofts, ornamental towers, spires, and necessary mechanical appurtenances are exempt from zoning district height limits and are not included in building height measurements.

(2) Building-mounted solar energy systems may extend up to three feet (3') above the applicable maximum zoning district height limit, provided they do not extend more than five feet (5') above the roof line.

* * *

SECTION 39. That Section 28.15.240 of the Zoning Ordinance is hereby amended to read as follows:

Sec 28.15.240 Words And Terms Beginning With "A".

Accessory Dwelling Unit. A smaller, secondary dwelling unit that complies with the regulations of DGMC Section 28.6.010(f).

SECTION 40. That Section 28.15.050 of the Zoning Ordinance is hereby amended to read as follows:

Section 28.15.050 Words And Terms Beginning With "B".

Building-Mounted Wind Energy System (BMWES) – Wind energy conversion systems (such as Horizontal Axis Wind Turbines and Vertical Axis Wind Turbines) that are structurally attached to the roof or side of a building.

SECTION 41. That Section 28.15.060 of the Zoning Ordinance is hereby amended to read as follows:

Section 28.15.060 Words And Terms Beginning With "C".

Caliper. ~~A measurement of the size of a young tree, measured as the diameter of its trunk twelve inches (12") above the root ball. See Figure 15-4.~~ The diameter of the trunk of a tree, measured six inches (6") above the ground level, soil line or root flare, as appropriate, or twelve inches (12") above that point where the measurement at six inches (6") is four and one-half inches (4.5") or more. Caliper applies to newly planted trees, existing trees are measured by DBH.

Figure 15-4: ~~Caliper (tree size measurement)~~Reserved

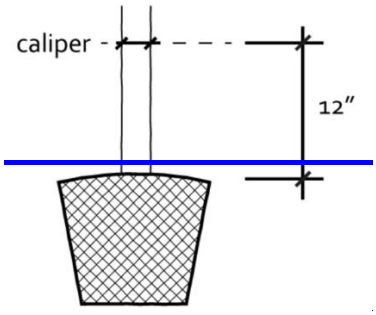

* * *

Correlated Color Temperature (CCT): A measure of the color appearance of a light source expressed in Kelvin (K).

* * *

SECTION 42. That Section 28.15.070 of the Zoning Ordinance is hereby amended to read as follows:

Section 28.15.070 Words And Terms Beginning With "D".

Drip Irrigation System: An irrigation system that saves water by allowing water to drip slowly to the roots of plants, either onto the soil surface or directly onto the root zone. Such systems include, but are not limited to, soaker hoses.

SECTION 43. That Section 28.15.080 of the Zoning Ordinance is hereby amended to read as follows:

Section 28.15.080 Words And Terms Beginning With "E".

Electric Vehicle (EV). Any vehicle that is licensed and registered for operation on public and private highways, roads, and streets; either partially or exclusively, on electrical energy from the grid or an off-board source, that is stored on-board via a battery. “Electric vehicle” includes: (1) battery electric vehicles; and (2) plug-in hybrid electric vehicles.

~~Electric Vehicle (EV) Charging Station. A public or private parking space that is served by battery charging station equipment.~~

Electric Vehicle Charging Station, Private (Restricted-Access). An electric vehicle charging station that is not available for use by the general public. Examples include electric vehicle charging stations that serve residential homeowners or renters, executive parking areas, ~~designated employee parking areas~~ and fleet parking areas.

Electric Vehicle Charging Station, Public. An electric vehicle charging station that is accessible to and available for use by the general public, including employees, visitors and patrons of any establishment.

Electric Vehicle Parking Space. Any parking space that is clearly identified to be used exclusively for the parking of an electric vehicle.

Electric Vehicle Supply Equipment (EVSE). A charging system for an electric vehicle. See the Electric Vehicle Charging Act for the complete definition (765 ILCS 1085/1 et. al).

Electric Vehicle Supply Equipment (EVSE), Level-1. Considered slow charging with voltage range from 0 through 120 volts.

Electric Vehicle Supply Equipment (EVSE), Level-2. Considered medium charging with voltage greater than 120 volts and includes 240 volts.

Electric Vehicle Supply Equipment (EVSE), Level-3 or Direct Current Fast Charging (DCFC). Considered fast or rapid charging with voltage greater than 240 volts.

Electric Vehicle-Capable Space: A parking space with electrical panel capacity reserved and conduit in place to support future installation of a dedicated 40-amp, 240-volt EVSE circuit.

Electric Vehicle Supply Equipment-Installed Space: An EVSE-Ready space with a Level 2 (or higher) electric vehicle supply equipment unit installed and operational within three feet (3') of the parking space.

Electric Vehicle Supply Equipment-Ready Space: An EV-Capable space with conduit, wiring, and a 40-amp, 208- or 240-volt dedicated branch circuit installed and terminating within three (3) feet of the parking space, ready for EVSE installation.

Extended Family Accessory Housing Unit. A secondary dwelling unit (within a detached house) that ~~is~~ was approved as a special use prior to March 1, 2027. ~~and that complies with the regulations of DGMC Section 28.6.010(f).~~

SECTION 44. That Section 28.15.110 of the Zoning Ordinance is hereby amended to read as follows:

Section 28.15.110 Words And Terms Beginning With "H".

Horizontal Axis Wind Turbine (HAWT) – A type of wind turbine where the main rotor shaft and electrical generator are positioned horizontally at the top of a tower or pole, with blades that rotate parallel to the ground.

SECTION 45. That Section 28.15.220 of the Zoning Ordinance is hereby amended to read as follows:

Section 28.15.220 Words And Terms Beginning With "S".

Sign, Digital Copy. A sign containing text, graphics, or images that can be changed or updated electronically (on-site or remotely) without manually replacing the physical sign face.

Sign, Marquee. A permanent roof-like structure made of durable, rigid material extending from the entrance of a building over a pedestrian or vehicular thoroughfare. A marquee is supported by the exterior wall of the building and contains a sign board, ~~or~~ changeable copy or a digital copy sign. See Figure 15-20.

Figure 15-20: Marquee Sign



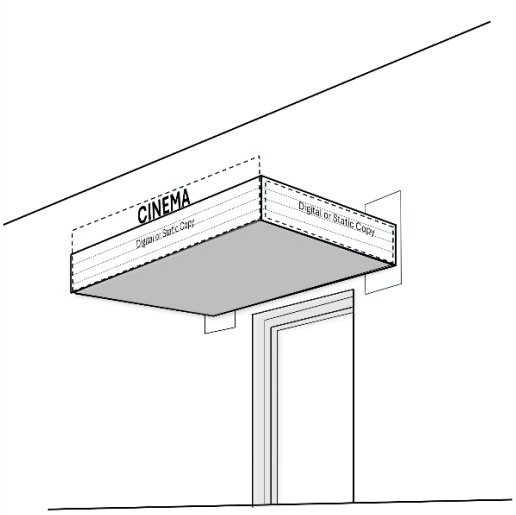

Small Wind Energy System (SWES) – A distributed, on-site power generation setup utilizing wind turbines with a capacity of up to one hundred (100) kilowatts (kW) to power homes or businesses.

* * *

Solar Car Canopy - A permanent, elevated, ground-mounted structure featuring solar panels on its roof, designed to generate renewable energy while shading vehicles from weather elements.

SECTION 46. That Section 28.15.250 of the Zoning Ordinance is hereby amended to read as follows:

Section 28.15.250 Words And Terms Beginning With "V".

Vertical Axis Wind Turbine (VAWT) – A type of wind turbine where the main rotor shaft is positioned vertically at the top of a tower or pole, perpendicular to the ground and wind direction.

SECTION 47. That all ordinances or parts of ordinances in conflict with the provisions of this Ordinance are hereby repealed.

SECTION 48. Authorization for Technical and Minor Revisions. The Village Attorney is hereby authorized to make such technical and minor substantive revisions to this Ordinance and to the Downers Grove Municipal Code as may be necessary and appropriate to carry out the intent and purpose of this Ordinance. Such revisions may include making changes consistent with the legislative intent, all without further action by the Mayor and Village Council, provided however, that no revision shall materially alter the substantive meaning or intent of this Ordinance without the prior approval of the Village Council.

SECTION 49. That this ordinance shall be in full force and effect from and after its passage and publication in the manner provided by law.

_____

By: Mayor

Passed:

Published:

Attest:

_____

By: Village Clerk

Village of Downers Grove

Table 5-1: Allowed Use Tables Based on Zoning Districts

Residential Use

Table 5-1a. Details living accommodations for one (1) or more persons by their specific use types and zoning districts.

Categories	R–1	R–2	R–3	R–4	R–5	R–5A	R–6	B–1	B–2	B–3	DC	DB	DT	O–R	O–R–M	M–1	M–2	INP–1	INP–2	FC	FB	FT	Supplemental Regulations
Detached house	P	P	P	P	P	P	P	–	–	–	–	–	P	–	–	–	–	–	–	–	–	P	
Attached house	P [21]	P [21]	P [21]	P [21]	P	P	P	–	–	–	–	S [20]	P	–	–	–	–	–	–	–	–	P	
Two–unit house	P [21]	P [21]	P [21]	P [21]	P	P	P				–	S [20]	P	–	–	–	–	–	–	–	–	P	
Apartment/Condo	–	–	–	–	–	–	P	P	P	S	S [17]	S	S	–	–	–	–	–	–	S [17]	S	S	
Group Living (except for the following uses)	S	S	S	S	S	S	S	–	–	–	–	–	–	–	–	–	–	S	S	–	–	S	
Group home, small (8–person maximum occupancy)	P	P	P	P	P	P	P	–	–	–	–	–	–	–	–	–	–	P	P	–	–	P	DGMC Section 28.06.050
Group home, large (9 or more occupants)	S	S	S	S	S	S	S	–	–	–	–	–	–	–	–	–	–	S	S	–	–	S	DGMC Section 28.06.050
Nursing home	S	S	S	S	S	S	S	P	P	S	–	–	–	–	–	–	–	–	S	–	S	S	DGMC Section 28.06.050
Sheltered Care	S	S	S	S	S	S	S	P	P	S	–	–	–	–	–	–	–	–	–	–	S	S	DGMC Section 28.06.050

Table 5-1a Notes

- [17] Located on the second floor or above.
- [20] Requires minimum lot area of 1 acre.
- **[21] See Sec 28.2.030 Table 2-2 Note [5].**

Public, Civic and Institutional Use

Table 5-1b. Details public, quasi–public, and private uses that provide unique services that benefit the public at–large by their specific use types and zoning districts.

Categories	R–1	R–2	R–3	R–4	R–5	R–5A	R–6	B–1	B–2	B–3	DC	DB	DT	O–R	O–R–M	M–1	M–2	INP–1	INP–2	FC	FB	FT	Supplemental Regulations
Aircraft Landing Area	–	–	–	–	–	–	–	–	S	S	–	–	–	S	S	S	S	–	S	–	–	–	
Cemetery	–	–	–	–	–	–	–	–	–	–	S [6]	–	–	–	–	–	–	S	S	–	–	–	
College or University	S [1]	S [1]	S [1]	S [1]	S [1]	S [1]	S [1]	–	–	–	S	S	S	S	S	–	–	–	S	S	S	–	
Community Center	S	S	S	S	S	S	S	–	–	–	S	S	S	–	–	–	–	S	P	S	S	–	
Fraternal Organization	S [2]	S [2]	S [2]	S [2]	S [2]	S [2]	S [2]	P	P	P	S	S	–	–	–	–	–	S	S	S	S	–	
Governmental Facility	S [2]	S [2]	S [2]	S [2]	S [2]	S [2]	S [2]	P	P	P	P	P	P	–	–	–	–	P	P	S	S	–	
Hospital	S [3]	S [3]	S [3]	S [3]	S [3]	S [3]	S [3]	–	P	P	–	–	–	–	–	–	–	–	S	–	–	–	
Library	–	–	–	–	–	–	–	–	–	S	S	S	S	S	S	–	–	S	S	S	S	S	
Museum or Cultural Facility	–	–	–	–	–	–	–	–	–	S	S	S	S	S	S	–	–	S	S	P	P	S	
Natural Resource Preservation	P	P	P	P	P	P	P	P	P	P	P	P	P	P	P	P	P	P	P	P	P	P	
Parks and Recreation	S	S	S	S	S	S	S	–	–	–	–	–	–	–	–	–	–	P	P	–	P	P	
Religious Assembly	S	S	S	S	S	S	S	S	P	P	– [6]	– [6]	S	S	S	–	–	S	S	–	–	S	DCMC Section 28.06.120
Safety Service	S	S	S	S	S	S	S	S	P	P	S	S	S	P	P	P	P	P	P	–	–	–	
School	S	S	S	S	S	S	S	–	–	–	–	–	S	–	–	–	–	S	S	–	–	S	
Minor: Utilities and Public Service Facility	P	P	P	P	P	P	P	P	P	P	P	P	P	P	P	P	P	P	P	–	–	–	
Major: Utilities and Public Service Facility	S	S	S	S	S	S	S	S	S	S	S	S	S	S	S	P	P	S	S	–	–	–	
Wireless Telecommunications: Freestanding tower	S	S	S	S	S	S	S	S	S	S	S	S	S	P	P	P	P	S	P	–	–	–	DCMC Section 28.06.170
Wireless Telecommunications: Building or tower–mounted antenna	P	P	P	P	P	P	P	P	P	P	P	P	P	P	P	P	P	P	P	–	–	–	DGMC Section 28.06.170

Table 5-1b Notes

- [1] Requires minimum lot area of 40 acres. Maximum 25% building coverage.
- [2] Requires minimum lot area of 10 acres.
- [3] Requires minimum lot area of 25 acres. Maximum 25% building coverage.
- [6] Special Use only if use was in existence on or prior to June 7, 2005.

Commercial Use

Table 5-1c. Details general commercial use categories by their specific use types and zoning districts.

Categories	R–1	R–2	R–3	R–4	R–5	R–5A	R–6	B–1	B–2	B–3	DC	DB	DT	O–R	O–R–M	M–1	M–2	INP–1	INP–2	FC	FB	FT	Supplemental Regulations
Adult Entertainment Establishment	–	–	–	–	–	–	–	–	–	–	–	–	–	–	P	P	P	–	–	–	–	–	DGMC Section 28.06.020
Animal Service																							
Boarding or shelter	–	–	–	–	–	–	–	–	S	P	–	–	–	–	–	P	P	–	–	P	P	–	
Grooming	–	–	–	–	–	–	–	P	P	P	P	P	P [18]	–	–	P	P	–	–	P	P	–	
Veterinary care	–	–	–	–	–	–	–	–	P	P	S	S	S [18]	–	–	P	P	–	–	P	P	–	DGMC Section 28.06.160
Assembly and Entertainment (except for the following uses)	–	–	–	–	–	–	–	–	–	P	S	S	–	–	–	–	–	–	S	P	P	–	
Auditorium	–	–	–	–	–	–	–	P	P	P	S	S	–	–	–	–	–	–	S	P	P	–	
Cinema	–	–	–	–	–	–	–	P	P	P	S	S	–	–	–	–	–	–	–	P	P	–	
Live Music Entertainment Venue	–	–	–	–	–	–	–	**P**	**P**	**P**	**S**	**S**	–	–	–	–	–	–	–	**P**	**P**	–	
~~**Theater**~~	~~–~~	~~–~~	~~–~~	~~–~~	~~–~~	~~–~~	~~–~~	~~–~~	~~**P**~~	~~**P**~~	~~**S**~~	~~**S**~~		~~–~~	~~–~~	~~–~~	~~–~~	~~–~~	~~**S**~~	~~**P**~~	~~**P**~~	~~–~~	
Broadcast or Recording Studio	–	–	–	–	–	–	–	–	–	–	–	–	–	–	P	P	P	–	–	P	P	–	
Building Service	–	–	–	–	–	–	–	–	S	P	–	S	–	**P**	**P**	**P**	P	–	–	–	–	–	
Business Support Service	–	–	–	–	–	–	–	P	P	P	P	P	–	**P**	**P**	**P**	P	–	–	P	P	–	
Consumer Maintenance and Repair Service	–	–	–	–	–	–	–	P	P	P	P	P	–	**P**	**P**	P	**P**	–	–	P	P	–	

Categories	R–1	R–2	R–3	R–4	R–5	R–5A	R–6	B–1	B–2	B–3	DC	DB	DT	O–R	O–R–M	M–1	M–2	INP–1	INP–2	FC	FB	FT	Supplemental Regulations
Personal Improvement Service: General Personal Improvement Services	–	–	–	–	–	–	–	P	P	P	P	P	P [18]	P	P	P	P	–	–	P	P	–	
Personal Improvement Service: Health and Fitness Services	–	–	–	–	–	–	–	P	P	P	P	P	P [13]	P	P	–	–	–	–	P	P	–	
Personal Improvement Service: Studio or Instructional Services	–	–	–	–	–	–	–	P	P	P	P	P	P	P	P	S	S	–	–	P	P	–	
Personal Improvement Service: Fortune–telling or Psychic Service	–	–	–	–	–	–	–	P	P	P	P	P	S	–	–	–	–	–	–	P	P	–	
Personal Improvement Service: Massage Therapy	–	–	–	–	–	–	–	–	–	–	–	–	–	–	–	S	S	–	–	P	P	–	DGMC Section 28.06.070
Personal Improvement Service: Tattoo and Body Piercing	–	–	–	–	–	–	–	–	–	–	–	–	–	–	S	S	S	–	–	–	–	–	
Research Service	–	–	–	–	–	–	–	P	P	P	–	–	–	–	–	P	P	–	–	P	P	–	
Day Care Home	P	P	P	P	P	P	P	–	–	–	–	–	P	–	–	–	–	–	–	–	–	P	DGMC Section 28.06.030
Day Care Center	–	–	–	–	S	S	S	P	P	P	–	S	S	P	P	P	P	S	–	–	S	–	DGMC Section 28.06.030
Eating and Drinking Establishment: Restaurant	–	–	–	–	–	–	–	P	P	P	P	P	S	P [7]	P [7]	–	–	–	–	P	P	–	
Eating and Drinking Establishment: Wine and/or Beer Boutique	–	–	–	–	–	–	–	P	P	P	P	P	S [18]	P	P	–	–	–	–	P	P	–	
Eating and Drinking Establishment: Brewing Facility	–	–	–	–	–	–	–	P	P	P	P	P	S [18]	P	P	P	P	–	–	P	P	–	
Financial Service	–	–	–	–	–	–	–	–	P	P	P	P	P [18]	P	P	P	–	–	–	P	P	–	
Funeral or Mortuary Service	–	–	–	–	–	–	–	S	S	S	–	–	–	–	–	–	–	–	–	–	–	–	
Lodging	–	–	–	–	–	–	–	–	P	P	–	S	–	–	P	–	–	–	–	–	–	–	

Categories	R–1	R–2	R–3	R–4	R–5	R–5A	R–6	B–1	B–2	B–3	DC	DB	DT	O–R	O–R–M	M–1	M–2	INP–1	INP–2	FC	FB	FT	Supplemental Regulations
Lodging: Bed and Breakfast	–	–	–	–	–	–	–	–	–	–	–	S	S	–	–	–	–	–	–	–	–	S	
Office: Business and Professional Office	S	S	S	S	S	S	S	P	P	P	P	P	S	P	P	P	P	–	–	P	P	S	DGMC Section 28.06.090
Office: Medical, Dental, and Health Practitioner	–	–	–	–	–	–	S [4]	–	P	P	P/S [8]	P/S [8]	S	P	P	P	P	–	–	P	P	S	
Parking, Non–Accessory	–	–	–	–	–	–	–	–	S	S	–	S	S	S	S	S	S	–	–	–	–	–	
Retail Sales: Convenience Goods	–	–	–	–	–	–	–	P	P	P	P/S [12]	P	P [18]	–	–	–	–	–	–	P	P	–	
Retail Sales: Consumer Shopping Goods	–	–	–	–	–	–	–	P	P	P	P/S [12]	P	P [18]	–	–	–	–	–	–	P	P	–	
Retail Sales: Guns and Firearm Supplies	–	–	–	–	–	–	–	[11]	[11]	[11]	–	–	–	–	–	S	–	–	–	–	–	–	
Retail Sales: Building Supplies and Equipment	–	–	–	–	–	–	–	P	P	P	P/S [12]	P	–	–	–	–	–	–	–	–	–	–	
Self–service Storage Facility	–	–	–	–	–	–	–	–	–	–	–	–	–	–	–	S	S	–	–	–	–	–	DGMC Section 28.06.130
Trade School	–	–	–	–	–	–	–	P	P	P	S	S	–	S	S	S	S	–	–	P	P	–	
Vehicle Sales and Service: Commercial Vehicle Repair and Maintenance	–	–	–	–	–	–	–	–	–	S	–	–	–	–	S	P	–	–	–	–	–	–	
Vehicle Sales and Service: Commercial Vehicle Sales and Rentals	–	–	–	–	–	–	–	–	–	S	–	–	–	–	–	S	–	–	–	–	–	–	
Vehicle Sales and Service: Fueling Station	–	–	–	–	–	–	–	–	S	S	–	–	–	–	S	S	–	–	–	–	–	–	DGMC Section 28.06.040
Vehicle Sales and Service: Personal Vehicle Repair and Maintenance	–	–	–	–	–	–	–	–	S [10]	S	–	–	–	–	S	S	–	–	–	–	–	–	DGMC Section 28.06.100
Vehicle Sales and Service: Personal Vehicle Sales and Rentals	–	–	–	–	–	–	–	–	S [10]	S	–	–	–	–	–	S	–	–	–	–	–	–	
Vehicle Sales and Service: Vehicle Body and Paint	–	–	–	–	–	–	–	–	–	–	–	–	–	–	–	S	–	–	–	–	–	–	

Categories	R–1	R–2	R–3	R–4	R–5	R–5A	R–6	B–1	B–2	B–3	DC	DB	DT	O–R	O–R–M	M–1	M–2	INP–1	INP–2	FC	FB	FT	Supplemental Regulations
Finishing Shop																							
Vehicle Sales and Service: Automobile Dealership Off–site Vehicle Storage	–	–	–	–	–	–	–	–	–	–	–	–	–	–	–	S	–	–	–	–	–	–	DGMC Section 28.06.190

Table 5-1c Notes

- [4] Must be within 150 feet of a B district.
- [7] Requires minimum seating capacity of 125 persons.
- [8] Permitted as of right up to 3,000 square feet (gross floor area); larger requires special use approval.
- [10] Maximum 10,000 square feet (gross floor area).
- [11] Permitted only if ancillary to the following principal uses: sporting goods stores, uniform supply stores and public safety equipment stores.
- [12] Consignment stores and martial arts studios permitted as of right up to 3,000 square feet (gross floor area); larger requires special use approval. Other uses permitted as of right up to 15,000 square feet (gross floor area); larger requires special use approval.
- [13] Barber shops, beauty shops and salons only; must be on ground floor and may not exceed 2,500 square feet floor area.
- [18] Maximum floor area is 2,500 square feet unless located along Main Street where there is no floor area limitation.

Wholesale, Distribution and Storage Use

Table 1-1d. Details general wholesale categories by their specific use types and zoning districts.

Categories	R–1	R–2	R–3	R–4	R–5	R–5A	R–6	B–1	B–2	B–3	DC	DB	DT	O–R	O–R–M	M–1	M–2	INP–1	INP–2	FC	FB	FT	Supplemental Regulations
Equipment and Materials Storage, Outdoor	–	–	–	–	–	–	–	–	–	–	–	–	–	–	–	–	–	–	–	–	–	–	
Trucking and Transportation Terminals	–	–	–	–	–	–	–	–	–	S	–	–	–	–	S	P	P	–	–	–	–	–	
Warehouse	–	–	–	–	–	–	–	–	–	–	–	–	–	S [16]	P	P	P	–	–	–	–	–	
Wholesale Sales and Distribution	–	–	–	–	–	–	–	–	P	P	–	–	–	–	P	P	P	–	–	–	–	–	

Table 5-1d Notes

- [16] See DGMC Section 28.06.180.

Industrial Use

Table 5-1e. Details industrial categories by their specific use types and zoning districts.

Categories	R–1	R–2	R–3	R–4	R–5	R–5A	R–6	B–1	B–2	B–3	DC	DB	DT	O–R	O–R–M	M–1	M–2	INP–1	INP–2	FC	FB	FT	Supplemental Regulations
Artisan Industrial	–	–	–	–	–	–	–	–	–	P	–	S [19]	S [18]	–	P	P	P	–	–	P	P	–	
Limited Industrial	–	–	–	–	–	–	–	–	–	P [11]	–	–	–	–	P	P	P	–	–	–	–	–	
General Industrial	–	–	–	–	–	–	–	–	–	–	–	–	–	–	P	P	P	–	–	–	–	–	
Intensive Industrial	–	–	–	–	–	–	–	–	–	–	–	–	–	–	–	–	S	–	–	–	–	–	
Junk or Salvage Yard	–	–	–	–	–	–	–	–	–	–	–	–	–	–	–	–	–	–	–	–	–	–	

Table 5-1e Notes

- [11] Permitted only if ancillary to the following principal uses: sporting goods stores, uniform supply stores and public safety equipment stores.
- [18] Maximum floor area is 2,500 square feet unless located along Main Street where there is no floor area limitation.
- [19] Use must include on–site retail sales.

Recycling Use

Table 5-1f. Details recycling categories by their specific use types and zoning districts.

Categories	R–1	R–2	R–3	R–4	R–5	R–5A	R–6	B–1	B–2	B–3	DC	DB	DT	O–R	O–R–M	M–1	M–2	INP–1	INP–2	FC	FB	FT	Supplemental Regulations
Recyclable Material Drop–off Facility	–	–	–	–	–	–	–	S	S	S	–	–	–	–	S	S	S	–	–	–	–	–	DGMC Section 28.06.110
Recyclable Material Processing	–	–	–	–	–	–	–	–	–	–	–	–	–	–	–	–	–	–	–	–	–	–	

Agricultural Use

Table 5-1g. Details agricultural categories by their specific use types and zoning districts.

Categories	R–1	R–2	R–3	R–4	R–5	R–5A	R–6	B–1	B–2	B–3	DC	DB	DT	O–R	O–R–M	M–1	M–2	INP–1	INP–2	FC	FB	FT	Supplemental Regulations
Animal Agriculture (except as allowed DGMC Chapter 5)	–	–	–	–	–	–	–	–	–	–	–	–	–	–	–	–	–	–	–	–	–	–	

Categories	R–1	R–2	R–3	R–4	R–5	R–5A	R–6	B–1	B–2	B–3	DC	DB	DT	O–R	O–R–M	M–1	M–2	INP–1	INP–2	FC	FB	FT	Supplemental Regulations
Crop Agriculture	P	P	P	P	P	P	P	–	–	–	–	–	–	–	–	–	–	–	–	–	–	–	
Community Garden	P	P	P	P	P	P	P	P	P	P	P	P	P	P	P	P	P	P	P	–	–	–	

Other Use

Table 5-1h. Details other use categories by their specific use types and zoning districts.

Categories	R–1	R–2	R–3	R–4	R–5	R–5A	R–6	B–1	B–2	B–3	DC	DB	DT	O–R	O–R–M	M–1	M–2	INP–1	INP–2	FC	FB	FT	Supplemental Regulations
Drive–in or Drive–through Facility	–	–	–	–	–	–	–	–	S	S	–	–	–	S [15]	S [21]	S [15]	–	–	–	–	–	–	DGMC Section 28.07.130
Medical Cannabis Cultivation Center	–	–	–	–	–	–	–	–	–	–	–	–	–	–	–	S	S	–	–	–	–	–	DGMC Section 28.05.100
Medical Cannabis Dispensing Organization	–	–	–	–	–	–	–	P	P	P	–	–	–	–	–	P	P	–	–	–	–	–	DGMC Section 28.05.100
Adult Use Cannabis Business Establishments	–	–	–	–	–	–	–	P	P	P	–	–	–	–	–	S	S	–	–	–	–	–	DGMC Section 28.05.100
Adult Use Cannabis Craft Grower	–	–	–	–	–	–	–	–	–	–	–	–	–	–	–	S	S	–	–	–	–	–	DGMC Section 28.05.100
Adult Use Cannabis Cultivation Center	–	–	–	–	–	–	–	–	–	–	–	–	–	–	–	S	S	–	–	–	–	–	DGMC Section 28.05.100
Adult Use Cannabis Dispensing Organization	–	–	–	–	–	–	–	–	–	–	–	–	–	–	–	S	S	–	–	–	–	–	DGMC Section 28.05.100
Adult Use Cannabis Infuser Organization or Infuser	–	–	–	–	–	–	–	–	–	–	–	–	–	–	–	S	S	–	–	–	–	–	DGMC Section 28.05.100
Adult Use Cannabis Processing Organization or Processor	–	–	–	–	–	–	–	–	–	–	–	–	–	–	–	S	S	–	–	–	–	–	DGMC Section 28.05.100
Adult Use Cannabis Transporting Organization or Transporter	–	–	–	–	–	–	–	–	–	–	–	–	–	–	–	S	S	–	–	–	–	–	DGMC Section 28.05.100

Table 5-1h Notes

- [15] Drive through banks and medical facilities only.
- [21] Drive through banks and medical facilities only.

Table 7-1: Minimum Motor Vehicle Parking Ratios

Residential Use.

Table 7-1a. Details minimum parking requirements for residential uses.

Categories	Regulations
Detached house	2 spaces per dwelling unit
Attached house	2 spaces per dwelling unit
Two–unit house	2 spaces per dwelling unit
Apartment/Condo	2 spaces per dwelling unit
Apartment/Condo: DB, DC, FC and FB zoning districts	1.4 spaces per dwelling unit
Apartment/Condo: For Persons 62 or older	0.6 spaces per dwelling unit
Apartment/Condo: For Persons 62 or older and offering on-site assisted living services	0.4 spaces per dwelling unit
Apartment/Condo: Inclusive Dwelling Units provided for in the F Zoning Districts	1 space per Inclusive Dwelling Unit
Group Living	0.5 spaces per bed

Categories	Regulations
Group Home, small (8–person maximum occupancy)	0.5 spaces per bed
Group Home, large (9 or more occupants)	0.5 spaces per bed
Nursing home	0.25 spaces per bed
Sheltered Care	0.25 spaces per bed

Public, Civic and Institutional Use.

Table 7-1b. Details minimum parking requirements for public, civic and instiuttional uses.

Categories	Regulations
Aircraft Landing Area	DGMC Section 28.7.040(g)
Cemetery	DGMC Section 28.7.040(g)
College or University	DGMC Section 28.7.040(g)
Community Center	3 spaces per 1,000 square feet of gross floor area
Fraternal Organization	3 spaces per 1,000 square feet of gross floor area
Governmental Facility	DGMC Section 28.7.040(g)
Hospital	DGMC Section 28.7.040(g)
Library	2.5 spaces per 1,000 square feet of gross floor area

Categories	Regulations
Museum or Cultural Facility	2 spaces per 1,000 square feet
Natural Resource Preservation	None
Parks and Recreation: Park	DGMC Section 28.7.040(g)
Parks and Recreation: Swimming Pool	DGMC Section 28.7.040(g)
Parks and Recreation: Tennis Court	DGMC Section 28.7.040(g)
Religious Assembly (existing as of 01-14-1991 and located within 1,000 feet of DC or DB zoning district)	1 space per 8 occupants (maximum capacity)
Religious Assembly (other)	1 space per 4 occupants (maximum capacity)
Safety Service	DGMC Section 28.7.040(g)
School: Elementary and Junior High	DGMC Section 28.7.040(g)
School: Senior High	DGMC Section 28.7.040(g)
Minor: Utilities and Public Service Facility	None
Major: Utilities and Public Service Facility	DGMC Section 28.7.040(g)
Wireless Telecommunications: Freestanding tower	None
Wireless Telecommunications: Building or tower–mounted antenna	None

Commercial Use.

Table 7-1c. Details minimum parking requirements for commercial uses.

Categories	Regulations
Adult Entertainment Establishment	DGMC Section 28.7.040(g)
Animal Service: Boarding or shelter	3 spaces per 1,000 square feet of gross floor area
Animal Service: Grooming	3 spaces per 1,000 square feet of gross floor area
Animal Service: Veterinary care	3 spaces per 1,000 square feet of gross floor area
Assembly and Entertainment	0.20 spaces per person, based on maximum occupancy
Assembly and Entertainment: Auditorium	0.20 spaces per person, based on maximum occupancy
Assembly and Entertainment: Cinema	0.20 spaces per person, based on maximum occupancy
Assembly and Entertainment: Live Music Entertainment Venue	0.20 spaces per person, based on maximum occupancy
Broadcast or Recording Studio	0.20 spaces per person, based on maximum occupancy
Building Service	1.17 spaces per 1,000 square feet of gross floor area
Business Support Service	2.5 spaces per 1,000 square feet of gross floor area
Consumer Maintenance and Repair Service	2.5 spaces per 1,000 square feet of gross floor area

Categories	Regulations
Personal Improvement Service: General Personal Improvement Services	3.5 spaces per 1,000 square feet of gross floor area
Personal Improvement Service: Health and Fitness Services	3.5 spaces per 1,000 square feet of gross floor area
Personal Improvement Service: Studio or Instructional Services	3.5 spaces per 1,000 square feet of gross floor area
Personal Improvement Service: Fortune-telling or psychic services	3.5 spaces per 1,000 square feet of gross floor area
Personal Improvement Service: Massage Therapy	3.5 spaces per 1,000 square feet of gross floor area
Personal Improvement Service: Tattoo and body piercing establishments	3.5 spaces per 1,000 square feet of gross floor area
Research Service	1 space per 1,000 square feet of gross floor area
Day Care: Day Care Home	None
Day Care: Day Care Center	2 spaces per 1,000 square feet of gross floor area, plus 1 drop-off or pick-up space per 1,000 square feet of gross floor area (not to exceed a maximum of 10)
Eating and Drinking Establishment: Restaurant	10 spaces per 1,000 square feet of gross floor area
Eating and Drinking Establishment: Wine and/or Beer Boutique	3 spaces per 1,000 square feet of gross floor area
Eating and Drinking Establishment: Brewing Facility	5 spaces per 1,000 square feet of gross floor area
Eating and Drinking Establishment: Carry-Out restaurant	3 spaces per 1,000 square feet of gross floor area
Financial Service	2.5 spaces per 1,000 square feet of gross floor area

Categories	Regulations
Funeral or Mortuary Service	4 spaces per 1,000 square feet of gross floor area
Lodging	1 space per guestroom plus parking required by this section for restaurants, bars and other accessory uses
Lodging: Bed and Breakfast	1 space per guestroom
Office: Business and Professional Office	2.5 spaces per 1,000 square feet of gross floor area
Office: Medical, Dental, and Health Practitioner	3.3 spaces per 1,000 square feet of gross floor area
Parking, Non-Accessory	None
Retail Sales: Convenience Goods	3 spaces per 1,000 square feet of gross floor area
Retail Sales: Consumer Shopping Goods	3 spaces per 1,000 square feet of gross floor area
Retail Sales: Guns and Firearm Supplies	3 spaces per 1,000 square feet of gross floor area
Retail Sales: Building Supplies and Equipment	3 spaces per 1,000 square feet of gross floor area
Retail Sales: Multi-Tenant Shopping Center	3 spaces per 1,000 square feet of gross floor area
Retail Sales: Furniture	1.67 spaces per 1,000 square feet of gross floor area.
Self–service Storage Facility	0.1 space per storage unit
Trade School	1 space per 4 occupants (maximum capacity)

Categories	Regulations
Vehicle Sales and Service: Commercial Vehicle Repair and Maintenance	1 per service bay plus stacking spaces per DGMC Section 28.7.130
Vehicle Sales and Service: Commercial Vehicle Sales and Rentals	1.67 spaces per 1,000 square feet of showroom area
Vehicle Sales and Service: Fueling Station	1 space per four pumps, plus 3 spaces per 1,000 square feet of gross floor area for retail uses
Vehicle Sales and Service: Personal Vehicle Repair and Maintenance	1 per service bay plus stacking per DGMC Section 28.7.130
Vehicle Sales and Service: Personal Vehicle Sales	1.67 spaces per 1,000 square feet of showroom gross floor area
Vehicle Sales and Service: Personal Vehicle Rental	2.5 spaces per 1,000 square feet of gross floor area, plus 1 space per rental vehicle
Vehicle Sales and Service: Vehicle Body and Paint Finishing Shop	1 per service bay, plus stacking spaces per DGMC Section 28.7.130
Vehicle Sales and Service: Automobile dealership Off-Site Vehicle Storage	DGMC Section 28.7.040(g)

Wholesale, Distribution and Storage Use.

Table 7-1d. Details minimum parking requirements for wholesale, distribution and storage uses.

Categories	Regulations
Equipment and Materials Storage, Outdoor	0.67 spaces per 1,000 square feet of gross floor area

Categories	Regulations
Trucking and Transportation Terminals	0.67 spaces per 1,000 square feet of gross floor area
Warehouse	0.67 spaces per 1,000 square feet of gross floor area
Wholesale Sales and Distribution	0.67 spaces per 1,000 square feet of gross floor area

Industrial Use.

Table 7-1e. Details minimum parking requirements for industrial uses.

Categories	Regulations
Artisan Industrial	1 space per 1,000 square feet of gross floor area
Limited Industrial	1 space per 1,000 square feet of gross floor area
General Industrial	1 space per 1,000 square feet of gross floor area
Intensive Industrial	1 space per 1,000 square feet of gross floor area
Junk or Salvage Yard	DGMC Section 28.7.040(g)

Recycling Use.

Table 7-1f. Details minimum parking requirements for recycling uses.

Categories	Regulations
Recyclable Material Drop–off Facility	DGMC Section 28.7.040(g)
Recyclable Material Processing	DGMC Section 28.7.040(g)

Agricultural Use.

Table 7-1g. Details minimum parking requirements for agriculture uses.

Categories	Regulations
Animal Agriculture	None
Crop Agriculture	DGMC Section 28.7.040(g)
Community Garden	None

Other Use.

Table 7-1h. Details minimum parking requirements for other uses.

Categories	Regulations
Drive–in or Drive–through Facility	Stacking spaces per DGMC Section 28.7.130
Medical Cannabis Cultivation Center	1 space per 1,000 square feet of gross floor area
Medical Cannabis Dispensing Organization	3 spaces per 1,000 square feet of gross floor area
Adult Use Cannabis Business Establishments	1 space per 1,000 square feet of gross floor area
Adult Use Cannabis Craft Grower	3 spaces per 1,000 square feet of gross floor area for dispensary portion of the business plus 1 space per 1,000 square feet of non-dispensary areas of business
Adult Use Cannabis Cultivation Center	1 space per 1,000 square feet of gross floor area
Adult Use Cannabis Dispensing Organization	3 spaces per 1,000 square feet of gross floor area
Adult Use Cannabis Infuser Organization or Infuser	1 space per 1,000 square feet of gross floor area
Adult Use Cannabis Processing Organization or Processor	1 space per 1,000 square feet of gross floor area
Adult Use Cannabis Transporting Organization or Transporter	1 space per 1,000 square feet of gross floor area

Village of Downers Grove

Planning and Zoning Commission - Report

Table 1 - Detailed information on this Planning and Zoning Commission Report.

Meeting Location	Civic Center – Betty Cheever Council Chambers
Meeting Address	850 Curtiss St., Downers Grove, IL 60515
Meeting Date	November 2, 2026 at 07:00 PM
Subject	26-PZC-0002 Zoning Ordinance Text Amendments
Type	Zoning Ordinance Text Amendments
Submitted by	Stan Popovich, AICP Director of Community Development

Request.

The Village is requesting multiple text amendments to the Zoning Ordinance. The proposed amendments are to the following Articles:

- Article 2, Residential Districts
- Article 3, Business and Employment Districts
- Article 4, Special Purpose Districts
- Article 5, Allowed Uses
- Article 6, Supplemental Use Regulations
- Article 7, Parking
- Article 8, Landscaping and Screening
- Article 9, Signs
- Article 10, General Development Regulations
- Article 11, Nonconformities
- Article 12, Review and Approval Procedures
- Article 14, Measurements
- Article 15, Definitions

Notice.

The application has been filed in conformance with applicable procedural and public notice requirements.

General Information.

Table 2 – Details about the petitioner's identity and location.

Petitioner Name	Petitioner Address
Village of Downers Grove	850 Curtiss Avenue, Downers Grove, IL 60515

Analysis.

Submittals.

This report is based on the following documents, which are on file with the Department of Community Development:

1. Petition
2. Draft Ordinance

Project Description.

In 2025, the Village adopted the Guiding DG plans, including the Active Transportation Plan (ATP), the Comprehensive Plan (CP), and the Environmental Sustainability Plan (ESP). The CP included an implementation chapter that identified updating the Zoning, Building and Subdivision Ordinance as a key item to be completed. The Zoning Ordinance is the primary regulatory tool that is used to implement the vision of the Guiding DG plans.

At the November 2, 2026 meeting, the Planning and Zoning Commission will review the cumulation of all text amendments that staff has sought feedback from the Village Council and Planning and Zoning Commission throughout this year. A summary of each topic is provided below, with links the meeting minutes, staff

reports and staff presentations for each topic. For the items discussed at the October 5, 2026 Planning and Zoning Commission meeting, the minutes are available as part of the November 2, 2026 Planning and Zoning Meeting Packet.

Solar Energy Systems.

Discussed at the April 6, 2026 PZC Meeting. (Minutes, Staff Report)

Staff reviewed the current Zoning Ordinance regulations related to solar energy systems and determined that the existing regulations provide a variety of options for installation of solar panels and are similar to other nearby community regulations. There are no proposed changes or additions to the existing solar energy system regulations. At their April 6, 2026 meeting, the Planning and Zoning Commission agreed that the regulations for solar energy were also sufficient.

Bird Friendly Glass.

Discussed at the April 6, 2026 PZC Meeting. (Minutes, Staff Report)

Staff investigated this topic and is recommending to not include any bird friendly glass regulations in the Zoning Ordinance. This is a relatively new field and there are not a significant number of ordinances in place to research to determine the applicability of this to the Village. At their April 6, 2026 meeting a majority of the Planning and Zoning Commission members generally agreed that the bird friendly glass text amendments should not proceed at this time.

Geothermal Energy Systems.

Discussed at the April 6, 2026 PZC Meeting. (Minutes, Staff Report)

Staff reviewed the current Zoning Ordinance regulations related to geothermal energy systems and determined that the existing regulations are in line with other communities. There are no proposed changes or additions to the existing geothermal energy system regulations. At their April 6, 2026 meeting, the Planning and Zoning Commission agreed that the regulations for geothermal energy systems were also sufficient.

Solar Car Canopies.

Discussed at the April 6, 2026 PZC Meeting. (Minutes, Staff Report)

Staff is proposing additions to the Zoning Ordinance to provide a definition and bulk requirements for solar car canopies. At their April 6, 2026 meeting, the Planning and Zoning Commission agreed with the proposed solar car canopy text amendments as originally presented.

Small Wind Energy Systems.

Discussed at the April 6, 2026 PZC Meeting. (Minutes, Staff Report)

Staff is proposing additions to the Zoning Ordinance to provide for building mounted and free-standing small wind energy systems. At their April 6, 2026 meeting, the Planning and Zoning Commission agreed with the proposed small wind energy systems text amendments as originally presented.

Outdoor Lighting.

Discussed at the April 6, 2026 PZC Meeting. (Minutes, Staff Report)

Staff is proposing additions and modifications to the existing outdoor lighting regulations to reduce the amount of light pollution and further compliance with dark sky lighting standards. At their April 6, 2026 meeting, the Planning and Zoning Commission agreed with the proposed outdoor lighting text amendments as originally presented.

Electric Vehicle (E.V.) Charging.

Discussed at the April 6, 2026 PZC Meeting. (Minutes, Staff Report)

Staff is proposing additions and modifications to the existing E.V. regulations, including requiring E.V. parking spaces in commercial developments. Based on feedback from the PZC at their April 6, 2026 meeting, when 25 or less parking spaces are provided in a parking lot ten percent (10%) of all parking spaces must be EVSE ready. When more than 25 spaces are provided, twenty percent (20%) of all parking spaces (rounded to the nearest whole number), not to exceed six (6) total

EVSE spaces must be provided. Upon further review of the Planning and Zoning Commission's recommendation, the proposed regulations were further refined to require (10%) of all parking spaces must be EVSE ready, not to exceed six (6) total EVSE spaces. The previous recommendation and related bonus reduced the amount of required parking to a level that may not be sufficient for several uses.

Landscaping.

Discussed at the April 6, 2026 PZC Meeting. (Minutes, Staff Report)

Staff is proposing additions and modifications to the existing commercial landscaping regulations to require more native plants to enhance the biodiversity of the community and to provide additional natural habitats for pollinators. At their April 6, 2026 meeting, the Planning and Zoning Commission agreed with the proposed landscaping amendments as originally presented.

Parking.

Discussed at the June 1, 2026 PZC Meeting. (Minutes, Staff Report)

The Comprehensive Plan included an action item to re-examine shared parking agreement regulations and to examine parking requirements to encourage outlot redevelopment and green space. Staff has reviewed the Village's shared parking agreements and is not recommending any changes to these sections of the parking regulations. Staff is proposing some changes to the required minimum number of parking spaces and is proposing an update to the maximum number of parking spaces amongst other parking regulation updates. At their June 1, 2026 meeting, the Planning and Zoning Commission agreed with the proposed landscaping amendments as originally presented.

Digital Signs.

Discussed at the July 21, 2026 VC Meeting (Staff Presentation, Minutes)
Discussed at the October 5, 2026 PZC Meeting. (Staff Report)

A Village Council priority action item was to review the Sign Ordinance as it relates to digital signs. Currently, digital signs are prohibited in the Village. Staff is

proposing changes which would allow digital signs in all Business and Employment Districts (B-1, B-2, B-3, O-R, O-R-M, M-1 and M-2) and Institutional Districts (INP-1 and INP-2). Additionally, marquee signs for cinemas and live music entertainment venues would be permitted to be digital. The proposed text amendments limit the number of digital signs, the size and setbacks of the digital signs.

Accessory Dwelling Units.

Discussed at the July 21, 2026 VC Meeting (Staff Presentation, Minutes)
Discussed at the October 5, 2026 PZC Meeting. (Staff Report)

Both the Guiding DG Comprehensive Plan and Attainable Housing Study identified considering the allowance for accessory dwelling units as a recommendation. In 2025, the Village Council approved text amendments for the Fairview Focus Area, which included regulations permitting Accessory Dwelling Units (ADUs), in the Fairview Transition District. With the proposed text amendments, ADUs would be allowed in all the Residential (R) zoning districts, the Downtown Transition (DT) zoning district and the Fairview Transition (FT) zoning district. At their October 5, 2026 meeting, the Planning and Zoning Commission agreed with the proposed accessory dwelling unit amendments as originally presented.

Two-Unit and Attached Housing.

Discussed at the July 21, 2026 VC Meeting (Staff Presentation, Minutes)
Discussed at the September 15, 2026 VC Meeting. (Staff Presentation, Minutes)
Discussed at the October 5, 2026 PZC Meeting. (Staff Report)

Both the Guiding DG Comprehensive Plan and Attainable Housing Study identified considering the expanded allowance of two-unit (duplex) and attached (townhouse) housing in the Village as a recommendation. Specifically in Guiding DG, the recommendation was to support incremental increases in housing such as duplexes and small-scale multi-family to address the need for diverse housing options. With the Attainable Housing study, it was further recommended to allow for development of two-unit and attached housing in select areas. The proposed text amendments lower the density requirements in the R-5, R5-A, R-6, Downtown Transition (DT) and Fairview Transition District (FT) zoning districts to allow more properties to be eligible for two-unit and attached housing development. The

proposed text amendments will also permit attached houses and two-unit houses in the R-1, R-2, R-3, R-4 zoning districts that abut a major or minor arterial street, as defined in the Village's current Comprehensive Plan. At their October 5, 2026 meeting, the Planning and Zoning Commission agreed with the proposed two-unit and attached housing amendments as originally presented.

Use Table.

Discussed at the July 21, 2026 VC Meeting (Staff Presentation, Minutes)
Discussed at the October 5, 2026 PZC Meeting. (Staff Report)

The Zoning Use Table (Table 5-1) has been updated to reflect the text amendments related to two-unit and attached housing. Furthermore, the Guiding DG Comprehensive Plan recommends that the Village continues to examine development regulations to ensure commercial nodes and corridors are adaptable for future market conditions, ensuring their long-term relevance and viability within Downers Grove. Certain Zoning Districts have been amended to allow additional uses as appropriate to address this recommendation. At their October 5, 2026 meeting, the Planning and Zoning Commission agreed with the proposed land use table amendments as originally presented.

Minor Clarifications and Modifications.

Discussed at the June 1, 2026 PZC Meeting. (Minutes, Staff Report)

This section of proposed amendments updates and clarifies various sections of the Zoning Ordinance. Over time and through practice, staff has identified code sections where further clarification and minor adjustments in language that would prove useful to both the practitioner and residents. The proposed changes are intended to further improve the review process while also ameliorating common questions and inquires that staff regularly receive. At their June 1, 2026 meeting, the Planning and Zoning Commission agreed with the proposed amendments as originally presented.

Landscape Requirements for Residential Development.

Discussed at the August 11, 2026 VC Meeting (Staff Presentation, Minutes)
Discussed at the October 20, 2026 VC Meeting. (Staff Presentation)

Consideration of private tree regulations is one of the Village Council's Priority Action Items. The Zoning Ordinance has been updated to include a landscaping section which references these proposed amendments to Chapter 7 of the Municipal Code. Additional minor amendments to create alignment between the existing Zoning Ordinance and proposed landscaping requirements are also identified.

Summary of Proposed Text Amendments.

The table below provides a summary of the proposed text amendments for these topics.

Table 2 – Summary table of all proposed text amendments

Section	Description	Attachment Page
DGMC Section 28.2.030 Lot and Building Regulations.	The density requirements (minimum lot area minimum lot area per dwelling unit, and minimum lot width) in the R zoning districts have been lowered to allow more eligible properties for two-unit and attached housing development. Updated to allow two-unit and attached houses in the R-1, R-2, R-3, R-4 that abut a major or minor arterial street, as defined in the Village's current Comprehensive Plan.	Pages 1 to 3
DGMC Section 28.3.030 Lot and Building Regulations.	Clarified minimum setback for commercial properties that are adjacent to residential zoning districts.	Pages 4 to 6

Section	Description	Attachment Page
DGMC Section 28.4.010 D, Downtown Districts.	The density requirements (minimum lot area and minimum lot area per dwelling unit) in the DT zoning district have been lowered to allow more eligible properties for two-unit and attached housing development.	Pages 6 to 9
DGMC Section 28.4.040 F, Fairview Districts.	The density requirements (minimum lot area, minimum lot area per dwelling unit and minimum lot width) in the FT zoning district have been lowered to allow more eligible properties for two-unit and attached housing development.	Pages 9 to 11
DGMC Section 28.5.030 Residential Use Category.	Provides additional terminology for two-unit and attached houses.	Pages 11 to 14
DGMC Section 28.5.050 Commercial Use Category.	Adds live music entertainment venue as an additional assembly and entertainment use. Assembly and entertainment is further refined because of this use added.	Page 14
DGMC Section 28.5.050 Commercial Use Category.	Clarifies the fortune telling or psychic services use.	Page 16
DGMC Section 28.5.050(f) Day Care Homes.	The maximum number of children permitted for a dwelling unit has been increased from eight (8) to twelve (12).	Page 17
DGMC Section 28.5.050(g) Eating and Drinking Establishments.	Adds a definition for a brewing facility.	Page 18

Section	Description	Attachment Page
DGMC Section 28.5.060 Wholesale, Distribution And Storage Use Category. DGMC Section 28.5.070 Industrial Use Category.	Adds incidental retail sales to certain warehouse and industrial uses.	Pages 18 to 20
DGMC Section 28.6.010 Accessory Uses.	Adds accessory dwelling unit (ADU) regulations which are proposed for allowance by-right in all the Residential (R) zoning districts, the Downtown Transition (DT) zoning district and the Fairview Transition (FT) zoning district. Removes extended family accessory housing regulations because of the allowance of ADUs.	Pages 21 to 26
DGMC Section 28.6.010(i) Garages.	Adds the allowance for solar car canopies on garages and carports in the DT, FT and R Zoning Districts.	Pages 26 to 27
DGMC Section 28.6.010 Accessory Uses.	Provides for solar car canopy regulations in residential and commercial districts.	Pages 27 to 28
DGMC Section 28.6.030 Day Care.	Clarified adult day care use to this section and clarified screening requirements.	Page 28
DGMC Section 28.6.040 Fueling Stations.	Adds provisions for the addition of electric vehicle charging stations upon the reconstruction of the majority of existing fuel pumps.	Page 29

Section	Description	Attachment Page
DGMC Section 28.6.050 Small Group Homes.	Eliminated separation distance requirement.	Page 30
DGMC Section 28.6.140 Temporary Real Estate Offices.	Clarifies that a sales office may be located in a model dwelling unit in R-1 through R-4 zoning districts.	Page 31
DGMC Section 28.6.200 Small Wind Energy Systems (S.W.E.S.).	Adds regulations for small wind energy systems.	Pages 31 to 33
DGMC Section 28.6.210 Electric Vehicle Charging Stations.	Adds and modifies regulations for electrical vehicle charging stations.	Pages 34 to 37
DGMC Section 28.7.020 Maximum Requirements.	The maximum parking permitted was modified to a percentage based maximum.	Page 38
DGMC Section 28.7.030 Minimum Motor Vehicle Parking Ratios.	The existing Table 7-1 is completely removed from the code and replaced with a new Table 7-1 that provides for minimum parking regulations. The new parking table proposes a reduction in the required minimum number of parking spaces for several uses.	Pages 38 to 43
DGMC Section 28.7.050 Parking Exemptions And Reductions.	Removes parking reductions for installing electrical vehicle parking spaces, as this is provided in the new Electric Vehicle Charging Stations, DCMC Section 28.6.210. The shared parking calculation table adds the term brewing facility.	Page 44

Section	Description	Attachment Page
DGMC Section 28.7.060 Bicycle Parking.	Clarifies terminology for certain listed uses.	Page 45
DGMC Section 28.7.070 Location of Off-Street Parking.	Adds the requirement for a private or public sidewalk connection to off-street parking locations.	Page 46
DGMC Section 28.7.100 Parking Area Design	Clarifies the application of stall dimension reductions.	Page 47
DGMC Section 28.7.130 Drive-Through and Drive-In Facilities.	Clarifies terminology for certain listed uses.	Pages 47 to 48
DGMC Section 28.8.010 Landscaping Regulations Purpose.	Modifies the purpose section to add provisions related to environmental sustainability.	Pages 48 to 49
DGMC Section 28.8.030 Parking Lot Interior Landscaping.	Adds additional provisions for more environmentally sustainable plantings for parking lot landscaping.	Pages 49 to 50
DGMC Section 28.8.040 Screening.	Clarifies screening requirements for ground mounted mechanical equipment and prohibits exterior roof access ladders.	Page 50
DGMC Section 28.8.060 Landscape Material And Design.	Adds additional provisions for more environmentally sustainable plantings, in addition to further clarifying the prohibition of invasive species. The required planting sizes for trees has been updated to align with proposed residential development landscaping requirements.	Pages 51 to 54

Section	Description	Attachment Page
DGMC Section 28.8.080. Residential Landscaping and Tree Preservation.	New section that references regulations for new residential development landscaping in DGMC Chapter 7.	Page 54
DGMC Section 28.9.020 Prohibited Signs And Sign Characteristics.	Signs containing electronic changeable copy/message board, will no longer be prohibited.	Page 56
DGMC Section 28.9.050 Sign Regulations Generally.	Adds provisions related to the quantity of allowable digital copy signs.	Pages 58 to 59
DGMC Section 28.9.070 Special Sign Types.	Adds regulations for digital copy and marquee signs.	Pages 60 to 62
DGMC Section 28.10.010 Fences.	Clarifies that chain-link fences with vertical slats or woven mesh are not considered solid-design fences. Also clarifies fence allowances for residential properties that front an alley.	Pages 63 to 64
DGMC Section 28.10.030 Outdoor Lighting.	Updates outdoor lighting regulations for further compliance with dark sky lighting standards.	Pages 64 to 67
DGMC Section 28.11.020 Nonconforming Lots.	Revises the non-conforming lot regulations to reflect the allowance of two-unit and attached housing uses.	Pages 67 to 68
DGMC Section 28.12.050 Special Uses.	Adds that Special Uses granted in conjunction with Planned Unit Developments do not expire. Provides for minimal decreases in green spaces.	Pages 71 to 72

Section	Description	Attachment Page
DGMC Section 28.14.080 Building Coverage.	Replaces the term extended family accessory unit with the term accessory dwelling unit. Clarifies building coverage bonus.	Page 73
DGMC Section 28.14.100 Setbacks.	Updates Permitted Yard Obstructions for various environmentally sustainable structures.	Pages 73 to 79
DGMC Section 28.14.130 Height.	Clarifies that stair enclosures without programmable space are exempt from height requirements.	Page 80
DGMC Section 28.15.240 Words And Terms Beginning With "A".	Adds the term accessory dwelling unit and revises the term extended family accessory unit.	Page 80
DGMC Section 28.15.050 Words And Terms Beginning With "B".	Adds the term building mounted wind energy systems.	Page 80
DGMC Section 28.15.060 Words And Terms Beginning With "C".	Amends the definition of caliper to align with proposed amendments to DGMC Chapter 7 and removes caliper figure. Adds the term correlated color temperature.	Page 81
DGMC Section 28.15.070 Words And Terms Beginning With "D".	Adds the term drip irrigation system.	Page 81
DGMC Section 28.15.080 Words And Terms Beginning With "E".	Modifies and adds terms for electric vehicles related items.	Pages 82 to 83

Section	Description	Attachment Page
DGMC Section 28.15.110 Words And Terms Beginning With "H".	Adds the term horizontal axis wind turbine.	Page 83
DGMC Section 28.15.220 Words And Terms Beginning With "S".	Adds the term sign, digital copy. Revises the definition for marquee signs to allow digital copy signs. Adds the term solar car canopy and small wind energy systems.	Pages 84 to 85
DGMC Section 28.15.250 Words And Terms Beginning With "V".	Adds the term vertical axis wind turbine.	Page 85
Table 5-1.	Updates Zoning Use Table (Table 5-1) to reflect the text amendments related to two-unit and attached housing, the expansion of uses in certain districts, and proposed new uses.	
Table 7-1.	The current Table 7-1 is deleted and replaced with a new minimum motor vehicle parking ratio table, as referenced in DGMC Section 28.12.050.	

Schedule.

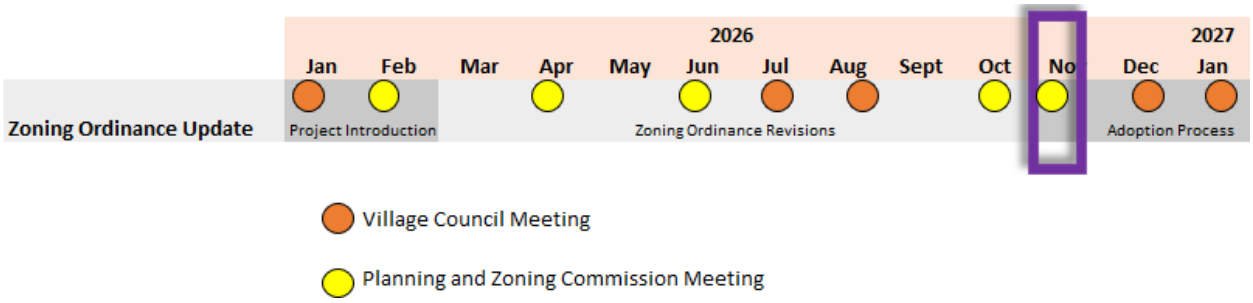

Neighborhood Comment.

Since January 2026, the Village has held seven public meetings regarding these text amendments. At various meetings, public comments have been received as identified in the meeting minutes. For this public hearing, the legal notice was published in the Daily Herald Life. Staff did not receive any inquiries from the public since publication.

Findings of Fact.

The petitioner (Village of Downers Grove) has outlined responses to the standards of approval below. The petitioner will further address the proposal and justification to support the requested zoning ordinance text amendments at the Planning and Zoning Commission public hearing.

Sec 28.12.020(f) Review and Approval Criteria

The decision to amend the zoning ordinance text is a matter of legislative discretion that is not controlled by any one standard. In making recommendations and decisions about zoning ordinance text amendments, review and decision-making bodies must consider at least the following factors:

(1) *Whether the proposed text amendment is in conformity with the policy and intent of the comprehensive plan;*

The proposed text amendments are consistent with the policy and intent of the Guiding DG plans, including the Active Transportation Plan (ATP), the Comprehensive Plan (CP), and the Environmental Sustainability Plan (ESP). The CP included an implementation chapter that identified updating the Zoning, Building and Subdivision Ordinance as a key item to be completed. In each case, the proposed amendments further the following policies and goals of the Guiding DG plans:

- Consider allowing Accessory Dwelling Units (ADUs) in single family residential zoning districts (CP).
- Consider introducing duplexes, small-scale multiple family to single family residential zoning districts (CP).
- Encourage mix of retail, service, office and multi-family in neighborhood commercial areas (CP).
- Review the Zoning Ordinance to ensure shops, restaurants, entertainment and high-density housing are allowed in mixed-use developments (CP).
- Examine the use list to promote entertainment uses in the Downtown (CP).
- Consider updating the outdoor lighting code to a dark sky lighting code (CP, ESP).
- Consider encouraging bird friendly glass in multi-family buildings (CP).
- Consider updating EV charging regulations, including charging areas and parking areas (ATP, CP).
- Consider updating landscaping requirements to require native plantings (CP, ESP).
- Examine regulations related to solar, geothermal and small scale wind (ESP).
- Examine solar canopy location regulations (ESP).
- Re-examine shared parking agreement regulations (CP).
- Examine parking requirements to encourage outlot redevelopment (CP).
- Examine parking requirements to encourage additional green space (CP).
- Examine micromobility and bike parking requirements (CP).

This standard is met.

(2) Whether the proposed zoning ordinance text amendment corrects an error or inconsistency in the zoning ordinance, meets the challenge of a changing condition or is necessary to implement established policy.

The proposed text amendments address inconsistencies in the zoning ordinance, provide clarity and implement the Guiding DG set of plans which are established policies. All amendments provide clarification, additional flexibility and/or remove inconsistencies in the Zoning Ordinance. The proposed amendments also meet the challenge of changing conditions as identified and recommended by the Guiding DG Comprehensive Plan. The proposed amendments further the purposes of the Zoning Ordinance as shown in Section 28.1.060 of the Zoning Ordinance. This standard is met.

Draft Motion.

Staff recommends that the Planning and Zoning Commission forward a positive recommendation to the Village Council at their November 2, 2026 meeting. Should the Planning and Zoning Commission find that the request is consistent with the Comprehensive Plan and meets the requirements of the Zoning Ordinance, staff has prepared a draft motion that the Planning and Zoning Commission may make for the recommendation approval of 26-PZC-0002:

> Based on the petitioner's submittal, the staff report, and the testimony presented, I find that the petitioner has met the standards of approval for a Zoning Text Amendment as required by the Village of Downers Grove Zoning Ordinance and is in the public interest and therefore, I move that the Planning and Zoning Commission recommend to the Village Council approval of 26-PZC-0002 regarding the proposed amendments to Articles 2, 3, 4, 5, 6, 7, 8, 9, 10, 11, 12, 14 and 15 of the Zoning Ordinance.

Staff Report Approved By:

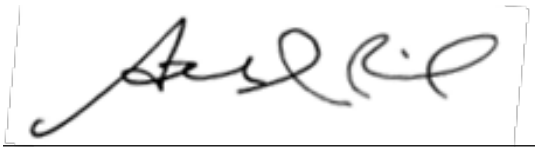

Stanley J. Popovich, AICP
Director of Community Development

Ordinance

An Ordinance Amending Certain Zoning Ordinance Provisions

BE IT ORDAINED by the Village Council of the Village of Downers Grove in DuPage County, Illinois, as follows: (Additions are indicated by blue/underlined; deletions by ~~blue/strikeout~~):

SECTION 1. That Section 28.2.030 of the Zoning Ordinance is hereby amended to read as follows:

Sec 28.2.030 Lot And Building Regulations.

The lot and building regulations of Table 2-2 apply to all principal uses and structures in R districts, except as otherwise expressly stated in this zoning ordinance. General exceptions to lot and building regulations and rules for measuring compliance can be found in Article XIV of this Chapter. Additional regulations governing accessory uses and structures can be found in DGMC Section 28.6.010. See also Figure 2-1. Additional regulations governing non-conforming lots can be found in DGMC Section 28.11.020.

Table 2-2: R District Lot and Building Regulations

	Regulations	R-1	R-2	R-3	R-4	R-5	R5-A	R-6
	Minimum District Area (square feet)	20,000	15,000	10,500	7,500	87,120	87,120	87,120
L1	Minimum Lot Area (square feet)							
	Detached house	20,000	15,000	10,500	7,500	7,500	7,500	7,500
	Attached house (applies to development not individual units)	20,000 [5]	15,000 [5]	10,500 [5]	7,500 [5]	~~8,000~~ 7,500	~~8,000~~ 7,500	~~10,500~~ 7,500

	Two-unit house	20,000 [5]	15,000 [5]	10,500 [5]	7,500 [5]	~~10,500~~ 7,500	~~10,500~~ 7,500	~~10,500~~ 7,500
	Apartment/condo	-	-	-	-	-	-	~~10,500~~ 7,500
	Other buildings/uses	20,000	15,000	10,500	7,500	10,500	10,500	10,500
	Minimum Lot Area per Dwelling Unit (square feet)							
	Detached house	20,000	15,000	10,500	7,500	7,500	7,500	7,500
	Attached house	6,667 [5]	5,000 [5]	3,500 [5]	2,500 [5]	~~4,000~~ 2,500	~~4,000~~ 2,500	2,500
	Two-unit house	10,000 [5]	7,500 [5]	5,250 [5]	3,750 [5]	~~5,250~~ 3,750	~~5,250~~ 3,750	~~5,250~~ 3,750
	Apartment/condo	-	-	-	-	-	-	1,000
	Other buildings/uses	-	-	-	-	-	-	-
L_2	Minimum Lot Width (feet)							
	Detached house	100	85	75	50	50	50	50
	Attached house [1]	100 [5]	85 [5]	75 [5]	50 [5]	~~80~~ 50	~~80~~ 50	~~80~~ 50
	Two-unit house	100 [5]	85 [5]	75 [5]	50 [5]	~~80~~ 50	~~80~~ 50	~~80~~ 50
	Apartment/condo	-	-	-	-	-	-	~~80~~ 50
	Other buildings/uses	100	85	75	50	80	80	80
L_3	Minimum Street Frontage [1]	40	40	40	40	40	40	40
	Minimum Building Setbacks							
S_1	Street (feet)	40	35	30	25	25	25	25
S_2	Side (interior) (% lot width/feet, whichever is greater)	[2]	10/7	10/6	10/5	10/5	10/5	10/5[3]
S_3	Rear (feet)	20	20	20	20	20	20	20
	Maximum Floor Area Ratio							
	Residential	-	-	-	-	-	-	~~1.50~~
	Nonresidential	0.60	0.60	0.60	0.60	0.80	0.80	1.50

C	Maximum Building Coverage (% of lot, principal + accessory)	32	32	32	32	32	32	40
	Maximum Building Height (feet)							
	Overall (highest point)	35	35	35	35	35	35	35
	Eave [4]	25	25	25	25	25	25	-

Notes to Table 2-2:

[1] Minimum lot frontage and lot width requirements do not apply to individual units in attached house projects.

[2] R-1 minimum side setback is ten percent (10%) of lot width or ten feet (10'), whichever is less, with no side setback less than seven feet (7').

[3] Minimum interior side setback for ~~apartment/condo or~~ nonresidential building on lots abutting R-1 through R-5A districts is twenty feet (20'), plus one foot (1') of additional setback for each foot of building height above twenty feet (20'). See Figure 2-2.

[4] The maximum eave height regulation does not apply to dormers, provided that individual dormers do not exceed four and one-half feet (4.5') in width and the combined width of all dormers projecting from a single side of the building does not exceed twenty-five percent (25%) of the length of that side of the building and the dormers are separated by a distance of at least five feet (5'). See Figure 2-3.

[5] Attached houses or two-unit houses are permitted on lots that:

a) abut a major or minor arterial street, as defined in the Village's current Comprehensive Plan, provided that, in the case of through lots, two or more directly abutting lots must have direct access (driveway) to the major or minor arterial street as of (insert actual date).

SECTION 2. That Section 28.3.030 of the Zoning Ordinance is hereby amended to read as follows:

Sec 28.3.030 Lot And Building Regulations.

The lot and building regulations of Table 3-2 apply to all principal uses and structures in B, O and M districts, except as otherwise expressly stated in this zoning ordinance. General exceptions to lot and building regulations and rules for measuring compliance can be found in Article XIV of this Chapter. Additional regulations governing accessory uses and structures can be found in DGMC Section 28.6.010. See also Figure 2-1.

Table 3-2: B, O and M District Lot and Building Regulations

	Regulations	B-1	B-2	B-3	O-R	O-R-M	M-1	M-2
	Minimum District Area (acres)	2	4	4	10	5[1]	6	6
L1	Minimum Lot Area (square feet)	-	-	-	-	20,000	20,000	20,000
	Minimum Lot Area Per Dwelling Unit (square feet)	Same as R6		-	-	-	-	-
	Maximum Floor Area Ratio (FAR)	0.40	0.75	0.75	0.75[2]	0.80/1.00[3]	1.00	1.00
	Maximum Building Coverage (% of lot)	-	-	-	-	-	60	60
	Building Setbacks (feet)							
S1	Street (see also Sec. 3.040)	25	25	25	75[6]	35[7]	35[7]	35[7]
S2	Side (interior)	-[4]	-[4]	-[4]	30[6]	10[8]	10[8]	20[7][9]
S3	Rear (residential floors)	30	30	30	-	-	-	-

S3	Rear (nonresidential floors)	-[5]	-[5]	-[5]	50[6]	10[8]	10[8]	20[7][9]
	Min. Landscaped Open Space (% of lot)[10]	10	10	10	20	15	10[11]	10
	Maximum Building Height (feet)	35	35	60	112	126/140[3]	37.5	37.5

Notes to Table 3-2:

[1] No minimum district area required north of Ronald Reagan Memorial Tollway or to property zoned M-1 or M-2 on 10-25-1982.

[2] Buildings with a floor area ratio (FAR) in excess of one-half (0.50) are subject to the following:

(1) required parking for floor area in excess of one-half (0.50) FAR must be located underground or in parking garage and

(2) landscaped open space must be provided on at least twenty percent (20%) of the lot.

[3] South of Ronald Reagan Memorial Tollway/North of Ronald Reagan Memorial Tollway.

[4] On lots abutting R districts, minimum side setback of abutting R district must be provided, plus one foot (1') of additional setback for each foot of building height above twenty feet (20'). See Figure 3-1.

[5] On lots abutting the rear lot line of property in R district, a minimum twenty foot (20') rear setback is required, plus one foot (1') of set-back per foot of building height above twenty feet (20'). On lots abutting the side lot line of property in R districts, the minimum side setback of the abutting R district must be provided, not to exceed ten feet (10'), plus one foot (1') of additional setback per foot of building height above twenty feet (20').

[6] Plus one foot (1') of additional setback for foot of building height above fifty feet (50').

[7] Plus one foot (1') of additional setback for each two feet (2') of building height above thirty-five feet (35').

[8] On lots abutting property in R district, a minimum thirty foot (30') setback is required, plus one foot (1') of additional setback for each two feet (2') of building height above twenty feet (20'). Parking must be set back at least fifteen feet (15') from abutting R district.

[9] Minimum seventy-five foot (75') setback required abutting R district.

[10] At least fifty percent (50%) of required landscaped open space must be located in the street yard.

[11] No minimum street yard landscaping required for properties abutting I-355 and frontage along west side of Thatcher Road.

SECTION 3. That Section 28.4.010 D of the Zoning Ordinance is hereby amended to read as follows:

Sec 28.4.010 D, Downtown Districts.

* * *

(d) Lot and Building Regulations. The lot and building regulations of Table 4-2 apply to all principal uses and structures in D districts, except as otherwise expressly stated in this zoning ordinance. General exceptions to lot and building regulations and rules for measuring compliance can be found in Article XIV of this Chapter. Additional regulations governing accessory uses and structures can be found in DGMC Section 28.6.010. See also Figure 2-1.

Table 4-2: D District Lot and Building Regulations

	Regulations	DC	DB	DT
L_1	Minimum Lot Area (square feet)			
	Detached house	-	-	7,500
	Attached house (applies to development not individual units)	-	-	~~10,500~~ 7,500
	Two-unit house (applies to development not individual units)	-	-	~~10,500~~ 7,500
	Apartment/condo	-	-	~~10,500~~ 7,500
	Other nonresidential buildings / uses	-	-	7,500
	Minimum Lot Area per Dwelling Unit (square feet)	~~900~~	~~800~~	~~1,800 / 4,000~~ [1]
	Detached house	-	-	7,500
	Attached house (applies to development not individual units)	-	2,500	2,500
	Two-unit house (applies to development not individual units)	-	3,750	3,750
	Apartment/condo	900	800	1,800
	Other nonresidential buildings / uses	-	-	7,500
L_2	Minimum Lot Width (feet)	-	-	50
	Minimum Building Setbacks (feet)	-	-	-
S_1	Street	-	~~[2]~~ [1]	10~~[3]~~[2]
S_2	Side (Interior)	-	~~[4]~~ [3]	5
S_3	Rear	-	~~[5]~~ [4]	20
	Build-to Zone			
	Minimum/maximum (feet)	0/5	0/10	-
	Minimum percent of building in primary street BTZ	80	80	-
	Minimum percent of building in secondary street BTZ	30	30	-
	Maximum Floor Area Ratio			

	Apartment / Condo	-	-	~~2.5~~
	Nonresidential	-	-	2.5
C	Maximum Building Coverage (% of lot, principal + accessory)	-	-	-
	Building Height (feet)			
	Maximum	40/3 ~~[7]~~[6]	70	36/3 ~~[6]~~[8]~~[5]~~[7]
	Minimum	24/2 ~~[9]~~[8]		24/2 ~~[9]~~[8]

~~[1] Attached house and apartment-condo/detached house and two-unit house.~~

~~[2]~~[1]When the extension of a front or street side lot line coincides with a front or street side lot line of an abutting R-zoned lot, a street setback must be provided on the DB-zoned lot. The street setback in such cases must extend at least thirty-five feet (35') from the abutting R-zoned lot and be at least as deep as the street setback required on the abutting R-zoned lot. A street setback at least eight feet (8') feet in depth must be provided along the remainder of the front or street side lot line. See Figure 4-1.

~~[3]~~[2]No street setback required if street lot line abuts DB zoning districts.

~~[4]~~[3]A side setback is required when abutting the side or rear lot line of an R-zoned lot. The setback must be at least as deep as the minimum side setback required on the abutting R-zoned lot, not to exceed ten feet (10') plus one foot (1') of additional setback for each foot of building height in excess of twenty feet (20'). See Figure 4-2.

~~[5]~~[4]A rear setback is required when abutting the side or rear lot line of an R-zoned lot. When abutting the rear lot line of an R-zoned lot, the setback must be at least twenty feet (20') in depth, plus one foot of additional setback for each foot of building height in excess of twenty feet (20'). When abutting the side lot line of an R-zoned lot, the minimum setback must be at least as deep as the side setback required on the abutting R-zoned lot, not to exceed ten feet (10') plus

one foot (1') of additional setback for each foot of building height in excess of twenty feet (20'). See Figure 4-3.

~~[6]~~[5]Detached houses, attached houses and two-unit houses subject to thirty-five foot (35') maximum height.

~~[7]~~[6]Maximum height is forty feet (40') or three (3) stories, whichever is less.

~~[8]~~[7]Maximum height is thirty-six feet (36') or three (3) stories, whichever is less.

~~[9]~~[8]Minimum height is twenty-four feet (24') or two (2) stories, whichever is more.

SECTION 4. That Section 28.4.010 F of the Zoning Ordinance is hereby amended to read as follows:

Sec 28.4.010 F, Fairview Districts

Table 4-4: F District Lot and Building Regulations

	Regulations	FC	FB	FT
L_1	Minimum Lot Area (square feet)			
	Detached house	-	-	7,500
	Attached house	-	-	~~8,000~~ 7,500
	Attached house (applies to development not individual units)			~~10,500~~ 7,500
	Two-unit house (applies to development not individual units)	-	-	~~10,500~~ 7,500
	Apartment/condo	-	-	7,500
	Other nonresidential buildings / uses			
	Minimum Lot Area per Dwelling Unit (square feet)			
	Detached house	-	-	7,500
	Attached house	-	-	2,500
	Two-unit house	-	-	~~5,250~~ 3,750

	Apartment / Condo	800	1,000	1,000
	Other buildings / uses	-	-	-
L_2	Minimum Lot Width (feet)			
	Detached house	-	-	50
	Attached house	-	-	~~80~~ 50
	Two-unit house	-	-	~~80~~ 50
	Apartment / Condo	-	-	~~80~~ 50
	Other buildings / uses	-	-	50
	Minimum Building Setbacks (feet)	-	-	-
S_1	Street	[1]	[1]	25
S_2	Side (Interior)(% lot width/feet, whichever is greater)	[2]	10/5 [5]	10/5
S_3	Rear	[3]	10 [6]	20
	Build-to Zone			
	Minimum/maximum (feet)	0/5	0/10	-
	Minimum percent of building in primary street BTZ	80	80	-
	Minimum percent of building in secondary street BTZ	30	30	-
	Maximum Floor Area Ratio			
	Apartment / Condo	-	-	-
	Nonresidential	-	-	-
C	Maximum Building Coverage (% of lot, principal + accessory)	-	-	40%
	Building Height (feet)			
	Maximum	60/7[7]	48/4 [4][8]	60/7[7]
	Minimum	24/2	-	-

[1] If adjacent to FT or R-zoned property, a twenty-five foot (25') setback is required for the first thirty-five feet (35') from the FT property line.

[2] If adjacent to FT or R-zoned property, a ten percent (10%) of lot width or five foot (5') setback of abutting FT or R district is required, whichever is greater.

[3] If adjacent to FT or R zoned property, a twenty foot (20') setback is required.

[4] Where the rear yard of the property is located adjacent to the railroad right-of-way, a height bonus of twelve feet (12') or one (1) story is permitted for portions of the building that are setback a minimum of half the lot depth.

[5] If adjacent to FC, no side setback is required.

[6] If adjacent to FC or railroad right-of-way, no rear setback is required.

[7] Maximum height is sixty feet (60') or five (5) stories, whichever is less. For all areas that are within thirty-five feet (35') of FT or R zoned lot, the maximum height is thirty-five feet (35').

[8] Maximum height is forty-eight feet (48') or four (4) stories, whichever is less. For all areas that are within thirty-five feet (35') of an FT or R zoned lot, the maximum height is thirty-five feet (35').

SECTION 5. That Section 28.5.010 of the Zoning Ordinance is hereby amended to read as follows:

Sec 28.5.010 Allowed Uses.

That TABLE 5.1 is deleted in its entirety and replaced with the following:

NEED NEW LINK TO TABLE 5.1

SECTION 6. That Section 28.5.030 of the Zoning Ordinance is hereby amended to read as follows:

Sec 28.5.030 Residential Use Category.

This category includes uses that provide living accommodations for one (1) or more persons. The residential use subcategories are as follows:

(a) Household Living. Residential occupancy of a dwelling unit by a household. When dwelling units are rented, tenancy is arranged on a month-to-month or longer basis. Uses where tenancy may be arranged for a shorter period are not

considered residential; they are considered a form of lodging. The following are household living specific use types:

(1) Detached House. A detached house is a principal residential building occupied by one dwelling unit located on a single lot with private yards on all sides. Detached houses are not attached to and do not abut other dwelling units.

(2) Attached House. An attached house is a dwelling unit that is attached to ~~one~~ two (2) or more dwelling units, each of which is joined together by party wall or walls or is located on its own lot with a common or abutting wall along the dwelling units' shared lot lines. Each dwelling unit has its own external entrance. These units are commonly known as townhomes or rowhomes.

(3) Two-unit House. A two-unit is a residential building occupied by two (2) dwelling units, both of which are located on a single lot. The dwelling units are attached and may be located on separate floors or side-by-side. These units are commonly known as duplexes.

(4) Apartment/condo. An apartment/condo building is a residential building on a single lot that is occupied by three (3) or more dwelling units that share common walls and/or common floors/ceilings.

(5) Manufactured Housing Unit. A manufactured housing unit is a residential building that complies with the National Manufactured Housing Construction and Safety Standards Act of 1974 (42 U.S.C. §§5401, et seq.). Manufactured housing units are expressly prohibited in the Village.

(6) Mobile Home. A vehicle without motive power used or adaptable for living, sleeping, business or storage purposes, having no foundation other than wheels, blocks, skids, jacks, horses, or skirting, that does not meet building code requirements and has been or reasonably may be equipped

with wheels or other devices for transporting the structure from place to place. Mobile homes are expressly prohibited in the Village.

(7) Mobile Home Park. A mobile home park is a lot upon which mobile homes or manufactured housing units are available for lease or upon which spaces for mobile homes or manufactured housing units are available for lease. Mobile home parks are expressly prohibited in the Village.

(8) Caretaker/Security Dwelling. A single dwelling unit that is accessory to an allowed use and that is occupied solely by an individual who is responsible for maintenance or security in association with the principal non-residential use of the property.

(b) Group Living. Residential occupancy of a building or any portion of a building by a group other than a household. Group living uses typically provide communal kitchen/dining facilities. Examples of group living uses include group homes, convents, monasteries, nursing homes, assisted living facilities, sheltered care facilities, retirement centers, homeless centers, shelters and halfway houses. The group living subcategories are as follows:

(1) Group Home. A detached house shared by persons with disabilities who live together as a single housekeeping unit in a long-term, household-like environment in which staff persons provide care, education, and participation in community activities for the residents with a primary goal of enabling the resident to live as independently as possible. Group homes do not include pre-release, work-release, probationary, or other programs that serve as an alternative to incarceration. See also DGMC Section 28.6.050.

(2) Nursing Home. A “long-term care facility,” as defined in 210 ILCS 45/1-113, that provides skilled nursing care. See also DGMC Section 28.6.080.

(3) Sheltered Care. A "long-term care facility," as defined in 210 ILCS 45/1-113, that provides maintenance and personal care.

SECTION 7. That Section 28.5.050 of the Zoning Ordinance is hereby amended to read as follows:

Sec 28.5.050 Commercial Use Category.

* * *

(c) Assembly and Entertainment. Uses that provide gathering places for participant or spectator recreation, entertainment or other assembly activities. Assembly and entertainment uses may provide incidental food or beverage service. Typical uses include arenas, billiard centers, video game arcades, ~~auditoriums,~~ and bowling centers. The following uses are also included in the assembly and entertainment use subcategory: ~~, cinemas and theaters.~~

(1) Auditorium. A large building or hall primarily used for public gatherings, typically stage performances.

(2) Cinema. A motion picture theater.

(3) Live Music Entertainment Venue. An establishment primarily used for the presentation of live music entertainment and performances typically for a fee or admission charge for participants or spectators. May feature other live performances, including plays, motion pictures, or other dramatic performances, so long as such performances constitute less than fifty percent (50%) of all events.

~~(4) Theater. A building or outdoor area in which plays, movies and other dramatic performances are given.~~

~~(4)~~(5) Expressly Prohibited.

The following uses are included in the assembly and entertainment use subcategory but are expressly prohibited in the Village, regardless of any underlying or overlay zoning designation:

a. ~~(1) off-track w~~Wagering facilities ~~locations~~ (as defined in 230 ILCS 5/1); and

b. ~~(2) h~~Hookah lounges, which are defined as facilities or locations whose business operation, whether as a principal use or as an accessory use, includes the smoking of tobacco or other substances through one or more hookah pipes (also commonly referred to as a hookah, waterpipe, shisha or narghile), including but not limited to establishments known variously as hookah bars, hookah parlors or hookah cafés.

(d) Broadcast or Recording Studio. Uses that provide for audio or video production, recording or broadcasting.

(e) Commercial Service. Uses that provide for consumer or business services and for the repair and maintenance of a wide variety of products.

(1) Building Service. Uses that provide maintenance and repair services for all structural and mechanical elements of structures, as well as the exterior spaces of a premise. Typical uses include contractor offices, janitorial, landscape maintenance, extermination, plumbing, electrical, HVAC, window cleaning and similar services.

(2) Business Support Service. Uses that provide personnel services, printing, copying, photographic services or communication services to businesses or consumers. Typical uses include employment agencies, copy and print shops, caterers, telephone answering services and photo developing labs.

(3) Consumer Maintenance and Repair Service. Uses that provide maintenance, cleaning and repair services for consumer goods on a site

other than that of the customer (i.e., customers bring goods to the site of the repair/maintenance business). Typical uses include laundry and dry cleaning pick-up shops, tailors, taxidermists, dressmakers, shoe repair, picture framing shops, locksmiths, vacuum repair shops, electronics repair shops and similar establishments. Business that offer repair and maintenance service technicians who visit customers' homes or places of business are classified as a "building service."

(4) Personal Improvement Service. Uses that provide a variety of non-medical services associated with frequent, recurrent, and instructional needs.

a. General Personal Improvement Services. Uses serving individual necessities, such as personal grooming and general well-being. Typical uses include barbers, beauty and nail salons, day spas, and microblading. ~~and businesses purporting to offer fortune-telling or psychic services.~~

b. Health and Fitness Services. Uses that provide physical fitness services and leisure time activities. Typical uses include health clubs, yoga studios, martial arts studios, dance studios, and gymnastics studios

c. Studio or Instructional Services. Uses in an enclosed building that focus on providing education, individual or group instruction or training in music, drama, fine arts, arts studios, language or similar activities. Also includes artist studios and photography studios.

d. Fortune-telling or Psychic Service. Uses pertaining to predictions of the future based upon intuitive or mental powers or supernatural influences and not statistical or otherwise empirical evidence.

~~d.~~e. Massage Therapy Services. Establishments whose primary business is that of providing massage – defined as any method of pressure on or friction against, or stroking, kneading, rubbing, tapping, pounding, vibrating or stimulating of the external soft parts of the body with the hands or with aid of any mechanical electrical apparatus or appliances with or without rubbing alcohol, liniments, antiseptics, oils, powder, creams, lotions, ointments or other similar preparations used in this practice, under such circumstances that it is reasonably expected that the person to whom treatment is provided, or some third party on such persons behalf, will pay money or give other consideration or any gratuity therefor. See also DGMC Section 28.6.070.

~~e.~~f. Tattoo and body piercing establishments as defined in 410 ILCS 54/1.

(f) Day Care. Uses providing care, protection and supervision for children or adults on a regular basis away from their primary residence for less than twenty-four (24) hours per day. Examples include state-licensed child care centers, preschools, nursery schools, head start programs, after-school programs and adult day care facilities. Day care expressly includes state-accredited adult day care facilities and facilities for child care, as defined in the Illinois Child Care Act.

(1) Day Care Center. A facility licensed by the State of Illinois that provides day care for more than eight (8) children or any number of adults. See also Sec. 6.030.

(2) Day Care Home. A dwelling unit licensed by the State of Illinois in which day care is provided for a maximum of ~~eight (8)~~ twelve (12) children, ~~excluding~~ including all natural, adopted and foster children of the residents of the dwelling unit. See also DGMC Section 28.6.030.

(g) Eating and Drinking Establishments

(1) Restaurant. Uses that prepare and serve food and beverages for on- or off-premise consumption as their principal business. Typical uses include cafés, restaurants, cafeterias, ice cream/yogurt shops, coffee shops and similar establishments, which may include a bar area that is customarily incidental and subordinate to the principal use as an eating establishment and that complies with Chapter 3 of this Code.

(2) Wine and/or Beer Boutique. An establishment where the retail sale of wine and/or beer, wine and/or beer tastings and wine and/or beer education seminars/classes are conducted on a regular basis and on-site consumption of wine and beer is allowed subject to provisions of the wine and/or beer boutique license classification (see Chapter 3 of this Code).

(3) Brewing Facility: Brewing facilities are engaged predominantly in manufacturing, but may include a bar or restaurant, and incidental sales. A place kept, used, maintained, advertised or held out to the public as a place in which the primary business is the distribution, manufacture, packaging, sale and storage of craft beer produced on the premises in compliance with Federal and State laws. On-site consumption of wine, beer or alcoholic liquor is allowed subject to provisions of Chapter 3 of this Code.

SECTION 8. That Section 28.5.060 of the Zoning Ordinance is hereby amended to read as follows:

Sec 28.5.060 Wholesale, Distribution And Storage Use Category.

This category includes uses that provide and distribute goods in large quantities, principally to retail sales, commercial services or industrial establishments. Long-term and short-term storage of supplies, equipment, commercial goods and personal items is included. The wholesale, distribution & storage subcategories are as follows:

(a) Equipment and Materials Storage, Outdoor. Uses related to outdoor storage

of equipment, products or materials, whether or not stored in containers.

(b) Trucking and Transportation Terminal. Uses engaged in the dispatching and long-term or short-term storage of trucks, buses and other vehicles, including parcel service delivery vehicles, taxis and limousines. Minor repair and maintenance of vehicles stored on the premises is also included. Includes uses engaged in the moving of household or office furniture, appliances and equipment from one location to another, including the temporary on-site storage of those items.

(c) Warehouse. Uses conducted within a completely enclosed building that are engaged in long-term and short-term storage of goods and that do not meet the definition of a "self-service storage facility" or a "trucking and transportation terminal." Such uses may also include incidental retail sales.

(d) Wholesale Sales and Distribution. Uses engaged in the wholesale sales, bulk storage and distribution of goods. Such uses may also include incidental retail sales and wholesale showrooms. This subcategory expressly includes the following uses: bottled gas and fuel oil sales, ice distribution centers, monument sales, storage building sales, vending machine sales, auctioneers and frozen food lockers.

SECTION 9. That Section 28.5.070 of the Zoning Ordinance is hereby amended to read as follows:

Sec 28.5.070 Industrial Use Category.

This category includes uses that produce goods from extracted and raw materials or from recyclable or previously prepared materials, including the design, storage and handling of these products and the materials from which they are produced. The industrial subcategories are:

(a) *Artisan Industrial*. On-site production of goods by hand manufacturing, involving the use of hand tools and small-scale, light mechanical equipment in a completely enclosed building with no outdoor operations or storage.

Typical uses include woodworking and cabinet shops, ceramic studios, jewelry manufacturing and similar types of arts and crafts or very small-scale manufacturing uses that have no negative external impacts on surrounding properties. Such uses may also include incidental retail sales.

(b) *Limited Industrial*. Manufacturing and industrial uses that process, fabricate, assemble, treat or package finished parts or products without the use of explosive or petroleum materials. Uses in this subcategory do not involve the assembly of large equipment and machinery and have very limited external impacts in terms of noise, vibration, odor, hours of operation and truck and commercial vehicle traffic. Such uses may also include incidental retail sales.

(c) *General Industrial*. Manufacturing and industrial uses that process, fabricate, assemble or treat materials for the production of large equipment and machines as well as industrial uses that because of their scale or method of operation regularly produce odors, dust, noise, vibration, truck/commercial vehicle traffic or other external impacts that are detectable beyond the property lines of the subject property. Such uses may also include incidental retail sales.

(d) *Intensive Industrial*. Manufacturing and industrial uses that regularly use hazardous chemicals or procedures or produce hazardous byproducts, including the following: manufacturing of acetylene, cement, lime, gypsum or plaster-of-Paris, chlorine, corrosive acid or fertilizer, insecticides, disinfectants, poisons, explosives, paint, lacquer, varnish, petroleum products, coal products, plastic and synthetic resins and radioactive materials. This subcategory also includes petrochemical tank farms, gasification plants, smelting, asphalt and concrete plants and tanneries. Intensive industrial uses have high potential for external impacts on the surrounding area in terms of noise, vibration, odor, hours of operation and truck/commercial vehicle traffic.

(e) *Junk or Salvage Yard*. An area or building where waste or scrap materials are bought, sold, exchanged, stored, baled, packed, disassembled or handled for reclamation, disposal or other like purposes, including but not limited to scrap iron and other metals, paper, rags, rubber tires and bottles.

SECTION 10. That Section 28.6.010 of the Zoning Ordinance is hereby amended to read as follows:

Section 28.6.010 Accessory Uses.

* * *

(e) Reserved. ~~*Electric Vehicle Charging Stations*~~

~~General~~

~~Private (restricted-access) electric-vehicle (EV) charging stations are permitted as accessory uses in all zoning districts.~~

~~Public electric vehicle charging stations are permitted as accessory uses to allowed nonresidential uses in all zoning districts.~~

~~Parking~~

~~Electric vehicle charging stations may be counted toward satisfying minimum off-street parking space requirements.~~

~~Public electric vehicle charging stations must be reserved for parking and charging electric vehicles.~~

~~Equipment. Vehicle charging equipment must be designed and located so as to not impede pedestrian, bicycle or wheelchair movement or create safety hazards on sidewalks. Equipment is subject to the lot and building regulations of the subject zoning district unless otherwise expressly stated.~~

~~Maintenance. Electric vehicle charging stations must be maintained in all respects, including the functioning of the equipment. A phone number or other contact information must be provided on the equipment for reporting when it is not functioning or when other problems are encountered.~~

~~(f)*(i) Extended Family Accessory Housing*~~

~~(1) Where Allowed. Extended family accessory housing units may be approved in R-1, R-2, R-3 and R-4 districts, in accordance with the special use procedures of DGMC Section 28.12.050.~~

~~(2) Location. An extended family accessory housing unit must be located within the principal detached house. It may not be located in an accessory structure.~~

~~(3) Regulations. Approved extended family accessory housing units are subject to all of the following regulations.~~

~~a. Only one (1) extended family accessory housing unit is allowed within any detached house.~~

~~b. A separate exterior entrance may be added to serve an extended family accessory housing unit, provided that the door does not face the street.~~

~~c. The principal dwelling unit or the extended family accessory housing unit must be occupied by the legal or beneficial owner of the subject lot.~~

~~d. Only persons related by blood, marriage, or adoption to the occupants of the primary unit may occupy the extended family accessory housing unit. Further, at least one (1) of the units—the principal dwelling unit or the extended family accessory housing unit—must be occupied by a person either sixty-two (62) years of age or older or by a person with a physical or developmental disability that renders joint occupancy of the detached house medically necessary, beneficial, or desirable. Applicants for special use approval for extended family accessory housing have the burden of proving that such physical or developmental condition renders the joint occupancy of the detached house~~

~~medically necessary, beneficial or desirable. Special use approval for any extended family accessory housing unit will remain valid and in effect only such period of time as the occupancy requirements of this Section are met.~~

~~e. No additional roomers or boarders are allowed in any detached house occupied by an extended family accessory housing unit.~~

~~f. Detached houses containing extended family accessory dwelling unit must retain the appearance of a detached house. Floor plans and other specifications must be submitted and approved at the time of special use approval. Occupancy of an extended family accessory housing unit is subject to compliance with an approved floor plan for construction or conversion of the principal and accessory units, and to elevation drawings depicting the exterior appearance of the principal dwelling.~~

~~g. All owners of any extended family accessory housing dwelling are required to permit an annual inspection of the premises to assure continuing compliance with the requirements of this Section, and to submit to the Village on or before January 31 of each year a sworn affidavit certifying continued compliance with these regulations. The affidavit must identify all owners and the occupants of the principal and accessory units and their relationship to one another. Failure to maintain compliance with these regulations or failure to file the required affidavit will result in lapse of approval of the special use on the thirtieth (30th) day following notice of noncompliance, unless within that 30-day period, the owner of the extended family accessory housing unit remedies any defects causing noncompliance and obtains village approval that compliance has been established.~~

~~h. Special use approval for an extended family accessory housing unit will also lapse and be of no further effect if the owner occupying one (1) of the units transfers his or her interest to any other person or ceases to occupy the unit, unless the transfer is to a person who meets all applicable criteria and the~~

~~Village is notified of the transfer, or unless the village approves a new special use for the extended family accessory housing unit.~~

~~i. Within one hundred twenty (120) days of any expiration of special use approval for an extended family accessory housing unit, the property must be converted to a detached house (that does not contain an accessory housing unit) pursuant to reconversion plans submitted at the time of application for special use approval, unless the reconversion period is extended by the community development director for just cause shown.~~

~~(f)(ii) Extended Family Accessory Housing in the Fairview Transitional (FT) Zoning District: Notwithstanding anything in subsection (f)(i) above, to the contrary, the following general extended family accessory housing regulations, apply to properties located in the FT district.~~

~~(1) Where Allowed. Extended family accessory housing units are permitted in the FT district.~~

~~(2) Location. An extended family accessory housing unit may be located within the principal or accessory structure.~~

~~(3) Regulations. Approved extended family accessory housing units are subject to all of the following regulations.~~

~~a. Only one (1) extended family accessory housing unit may be located on a single lot of record.~~

~~b. A separate exterior entrance may be added to a principal detached house to serve an extended family accessory housing unit, provided that the door does not face the street.~~

~~c. The principal dwelling unit or the extended family accessory housing unit must be occupied by the legal or beneficial owner of the subject lot.~~

~~d. Only persons related by blood, marriage, adoption, or civil union to the occupants of the primary unit may occupy the extended family accessory housing unit.~~

~~e. No additional roomers or boarders are allowed in any principal or accessory structure occupied by an extended family accessory housing unit.~~

~~f. Detached houses containing extended family accessory dwelling units must retain the appearance of a detached house.~~

~~g. Floor area devoted to the extended family accessory housing unit located within the principal structure may not exceed forty percent (40%) of the floor area of the primary structure or one thousand (1,000) square feet, whichever is less. Within an accessory structure the floor area devoted to the extended family accessory housing unit may not exceed one thousand (1,000) square feet. See DGMC 28.6.010 for additional regulations on residential accessory buildings.~~

(f) Accessory Dwelling Units (ADUs)

(1) All Extended Family Accessory Housing Units created prior to the (insert actual date) shall be deemed a legal conforming ADU.

(2) Where Allowed. ADUs are allowed by-right in all the Residential (R) zoning districts, the Downtown Transition (DT) zoning district and the Fairview Transition (FT) zoning district.

(3) Location. An ADU may be located within a principal or accessory structure.

(4) Regulations. ADUs are subject to all of the following regulations.

a. Only one (1) ADU is allowed on a single lot of record.

b. Only one (1) household may reside in an ADU.

c. A separate exterior entrance may be added to a principal detached house to serve an ADU.

d. The principal dwelling unit or the ADU must be occupied by the

legal or beneficial owner of the subject lot.

e. Detached houses containing an ADU must retain the appearance of a detached house.

f. Floor area devoted to an ADU located within the principal structure may not exceed forty percent (40%) of the floor area of the primary structure or one thousand (1,000) square feet, whichever is less. Within an accessory structure the floor area devoted to an ADU may not exceed one thousand (1,000) square feet. See DGMC Section 28.6.010 for additional regulations on residential accessory buildings.

g. One (1) additional parking space shall be provided on-site for the ADU.

h. All utilities associated with the ADU shall be provided from the principal structure.

i. In cases where an ADU is located in an accessory structure, both the ADU and the land upon which the ADU is located shall remain under the same ownership of the principal structure and may not be subdivided.

(i) Garages

(a) Only one (1) detached garage and either one (1) carport or one (1) solar canopy are allowed per lot in Downtown Transition (DT), Fairview Transition (FT) and R zoning districts.

~~Dwelling units are expressly prohibited in the space above any detached garage in all zoning districts, except for the Fairview Transitional District (FT) zoning district.~~

See Figure 6-2. Reserved.

~~Figure 6-2: Space Above Detached Garage~~

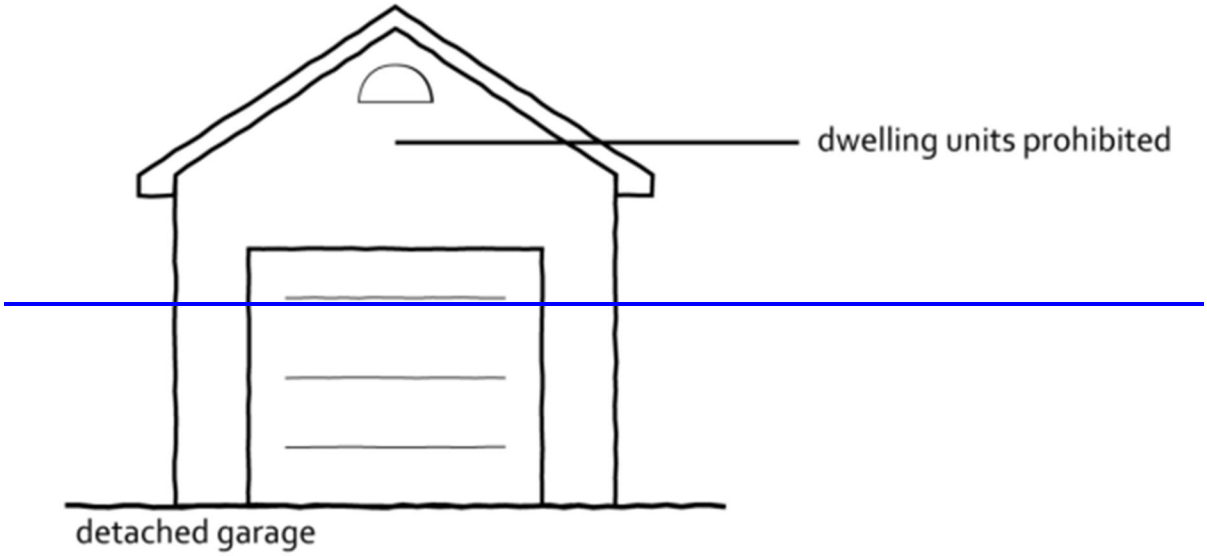

* * *

(m)(i) Solar Car Canopies

(1) In R zoned districts, DT and FT zoning districts the cumulative total square footage of solar car canopies may not exceed the total principal building footprint. In all other districts, solar car canopies are a permitted accessory structure on surface parking lots regardless of the existence of a principal building. Solar car canopies are not permitted in the Downtown Core (DC), Downtown Business (DB), Fairview Core (FC) and Fairview Business (FB) zoning districts.

(2) A solar car canopy is a permitted accessory structure located on top of a commercial or public parking garage(s). The solar car canopy may cover the entire garage. The maximum height for a solar car canopy as identified below is measured from the deck of the highest level of parking.

(3) Solar car canopies shall not exceed twenty-three feet (23') in height and shall either have a minimum vehicle clearance of eight feet (8') in height or the

minimum clearance for emergency vehicles as determined by the Community Development Director, whichever is higher.

(m) (ii) Solar Energy Systems

* * *

SECTION 11. That Section 28.6.030 of the Zoning Ordinance is hereby amended to read as follows:

Sec 28.6.030 Day Care.

(a) Day care centers and day care homes must be licensed by the State of Illinois under the Illinois Child Care Act (225 ILCS 10/2.09) or other applicable statute, or accredited by the State of Illinois as an adult daycare facility.

(b) Day care homes and day care centers for children in R districts must include an outdoor play area, fenced and screened from view from adjoining properties by a solid fence with a minimum height of six feet (6'), with a minimum of two hundred fifty (250) square feet of outdoor play area for each child at the facility, based on maximum enrollment of the day care facility.

(c) Day care centers for children located in nonresidential districts must include an outdoor play area, fenced and screened from view from adjoining properties by a solid fence with a minimum height of six feet (6'), with a minimum of seventy-five (75) square feet of outdoor play area for each child in the play area at any one time.

SECTION 12. That Section 28.6.040 of the Zoning Ordinance is hereby amended to read as follows:

Section 28.6.040 Fueling Stations.

Fueling stations are subject to the following regulations:

(a) Setbacks

(1) Interior side and rear setbacks with a minimum depth of twenty feet (20') must be provided abutting R-zoned lots. Setbacks abutting all other lot lines must comply with district requirements.

(2) Except for approved driveways and drive aisles, setbacks may not be paved and must be landscaped green space.

(b) Protective Curb. All landscaped areas must be protected by a raised curb at least six inches (6") in height or by a bumper guard of not more than eighteen inches (18") in height. Protective curbing at least six inches (6") in height must be provided along the edges of all areas accessible to motor vehicles upon adjacent property or street rights-of-way, except that provision may be made for cross-access to abutting commercial development.

(c) Upon the reconstruction of a majority of existing fuel pumps, a redevelopment of the site or the construction of a new fueling station, one (1) Electric Vehicle Supply Equipment (EVSE), Level-3 installed public parking space shall be provided per four (4) fuel pumps/dispensers, up to a maximum of three (3) EVSE Level-3 spaces.

SECTION 13. That Section 28.6.050(a) of the Zoning Ordinance is hereby amended to read as follows:

Sec 28.6.050 Group Homes.

(a) Small Group Homes. Group homes for eight (8) or fewer persons, including supervisory and oversight personnel, are permitted as of right in all districts that allow household living uses as of right, subject to the following regulations:

(1) The use must occupy a detached house, which is consistent in type and general outward appearance with other detached houses in the surrounding area.

(2) The facility must be operated by a governmental, religious or other not-for-profit agency.

(3) Occupancy may not exceed one (1) person per room, where "room" means a whole room used for living purposes, including living rooms, dining rooms, kitchens, bedrooms, furnished recreation rooms and enclosed porches suitable for year-round use, but not including strip or Pullman kitchens, bathrooms, open porches, balconies, halls, half-rooms, utility rooms, unfurnished attics, unfinished basements or unfinished storage spaces.

(4) A copy of the State license or certification for the group home, if a State license or certification is required it must be provided to the Village.

~~(5) Each proposed small group home must be separated by a minimum distance of five hundred feet (500') from any existing group home, as measured in a line from the nearest point of a lot line occupied by a group home to the nearest point of a lot line occupied by a group home.~~

~~(6)~~(5) An inspection must be conducted by the Community Development Department to ensure that existing building code requirements for residences are met prior to any occupancy or re-occupancy.

~~(7)~~(6) Small group home uses may not include any formalized counseling for persons other than the residents of the group home and may not include any formalized medical treatment other than physical or occupational therapy for residents only.

~~(8)~~(7) Small group home uses may not be any type of "long-term care facility," as defined in 210 ILCS 45/1-113.

~~(9)~~(8) In order to implement these requirements, a statement of the number of proposed occupants, a copy of the necessary licenses or certificates, if any are required, a floor plan depicting the number, size and location of rooms, and a site plan must be submitted at the time of application for an occupancy permit.

* * *

SECTION 14. That Section 28.6.140(c)(1) of the Zoning Ordinance is hereby amended to read as follows:

Sec 28.6.140 Temporary Real Estate Offices.

* * *

(c) R-1, R-2, R-3 and R-4 Districts. Temporary real estate sales offices in R-1, R-2, R-3 and R-4 zoning districts are subject to the following regulations:

(1) ~~No more than twenty-five percent (25%) of the gross floor area of a dwelling may be used for sales office purposes.~~ Sales may be conducted in a model dwelling unit and the ~~remainder of~~ building may be used for displaying styles of architecture, construction work, interior decoration and similar matters related to real estate sales.

* * *

SECTION 15. That Section 28.6.200 of the Zoning Ordinance is hereby added as follows:

Section 28.6.200 Small Wind Energy Systems (SWES).

(a) Building mounted wind energy system (BMWES)

(1) BMWES are not permitted in the Downtown Core (DC), Downtown Business (DB), Fairview Core (FC) and Fairview Business (FB) Districts. BMWES are a permitted accessory use in all other zoning districts.

(2) BMWES may be located on a principal or accessory structure.

(3) BMWES may have either a Horizontal Axis Wind Turbine (HAWT) or a Vertical Axis Wind Turbine (VAWT).

(4) In R, DT and FT zoning districts, only VAWT systems are allowed; HAWT systems are prohibited. No more than three (3) VAWT systems are permitted on a single property in R, DT and FT zoning districts.

(5) In all other non-residential zoning districts, both a HAWT and VAWT systems are allowed.

(6) In no case shall BMWES exceed the maximum height allowed in the subject zoning district.

(7) BMWES shall be setback from all adjacent lot lines a minimum distance equal to the total height of the BMWES.

(8) In R, DT and FT zoning districts, the combined diameter of a BMWES shall not exceed twenty percent (20%) percent of the width of each building elevation facing a street.

(9) In non-residential zoning districts (except as noted above), the combined diameter of a BMWES shall not exceed fifty percent (50%) of the width of each building elevation facing a street.

(10) The BMWES shall be sited such that shadow flicker will not fall on any window of an existing residential building, regardless of the zoning district that the residential building is located in, of an abutting property for more than one (1) hour per day. A shadow flicker study may be required that demonstrates the locations and the expected duration of shadow flicker caused by the BMWES, as determined by the Community Development Director.

(b) Freestanding wind energy system (FSWES)

(1) FSWES are not permitted in the Downtown Core (DC), Downtown Business (DB), Fairview Core (FC) and Fairview Business (FB) zoning districts. FSWES are a permitted accessory use in all other zoning districts.

(2) In R-zoned, DT and FT districts:

a. Only one (1) FSWES is permitted on the property.

b. The FSWES is only permitted in rear yards.

c. The FSWES maximum height is thirty-five feet (35'), to the highest point of the system when fully operational.

d. The FSWES shall be setback a distance equal to one hundred ten percent (110%) of the system height from the base of the tower to all property lines.

(3) In non-residential zoning districts (except as noted above):

a. No more than two (2) FSWES are permitted on the property.

b. FSWES are permitted in street, side or rear yards.

c. FSWES maximum height is seventy-five feet (75'), measured from the adjacent established grade to the highest point of the system when fully operational.

d. When located adjacent to other non-residentially zoned property, the FSWES shall be setback a distance equal to one hundred ten percent (110%) of the system height from the base of the tower to all property lines.

e. When located adjacent to an R, DT or FT zoning districts property or when located adjacent to an existing residential building, regardless of the zoning district that the residential building is in, the FSWES shall be setback a distance equal to one hundred fifty percent (150%) of the system height and in no case shall the tower base be located within one hundred feet (100') of all adjacent property lines.

f. The FSWES facility shall be sited such that shadow flicker will not fall on any existing residential building, regardless of the zoning district that the residential building is in, within five hundred feet (500') of the FSWES property for more than one (1) hour per day. A shadow flicker study may be required that demonstrates the locations and the expected duration of shadow flicker caused by the FSWES, as determined by the Community Development Director.

SECTION 16. That Section 28.6.210 of the Zoning Ordinance is hereby added as follows:

Section 28.6.210 Electric Vehicle Charging Stations.

(1) General

a. Private (restricted-access) electric-vehicle charging stations are permitted as accessory uses in all zoning districts.

b. Public electric vehicle charging stations are permitted as accessory uses in all non-residential zoning districts and permitted as an accessory use for non-residential uses located in R districts.

(2) Parking

a. Electric vehicle charging stations may be counted toward satisfying minimum off-street parking space requirements.

b. Public electric vehicle charging stations must be reserved for parking and charging electric vehicles.

c. Installation of public Electric Vehicle Supply Equipment (EVSE) chargers are required upon a parking lot reconstruction, a site redevelopment or new construction.

d. Level 1 EVSE chargers are prohibited for public use.

e. Minimum number of required EVSE spaces for all uses, excluding fueling stations, is ten percent (10%) of all parking spaces (rounded to the nearest whole number), not to exceed six (6) total EVSE installed spaces. EVSE installed spaces must be Level 2 or Level 3 EVSE-ready spaces.

f. All locations where a public EVSE-ready installed space is located, at least one (1) parking space shall be equipped with an accessible charging station meeting the requirements of the current Illinois Accessibility Code.

g. EVSE-installed spaces may not be located in garage levels located below grade.

h. EVSE parking bonus. Each EVSE-ready and EVSE-installed parking space are provided a parking bonus as indicated below when calculating the minimum off-street parking requirements of Section 28.7.030. Tables 6.3a and 6.3b offer examples of compliance with DGMC Section 28.6.210. These EVSE parking bonuses do not apply to residential uses.

Table 6.2 – Required Parking Bonus Table

Type of EVSE public parking space	Number of required parking spaces credited
EVSE ready	One and a half (1.5) credited spaces per 1 EVSE ready space
Level 2 EVSE installed	Two (2.0) credited spaces per 1 Level 2 EVSE installed space
Level 3 EVSE installed	Three (3.0) credited spaces per 1 Level 3 EVSE installed space

Table 6.3a Example Bonus Table, 25 Parking Spaces Lot Proposed

Required Spaces	Required amount of EVSE Ready	Level 2 EVSE Installed	Level 3 EVSE Installed
Total EVSE Spaces Required (per Table 6.2)	3	3	3
Parking Bonus Provided (Per Table 6.3)	5	6	9
Total Parking Spaces Required to be installed	20	19	16

(with EVSE Credit)			

Table 6.3b Example Bonus Table, 50 Parking Spaces Lot Proposed

Required Spaces	Required amount of EVSE Ready	Level 2 EVSE Installed	Level 3 EVSE Installed
Total EVSE Spaces Required (per Table 6.2)	5	5	5
Parking Bonus Provided (Per Table 6.3)	8	10	15
Total Parking Spaces Required to be installed (with EVSE Credit)	42	40	35

(3) Equipment. Electric Vehicle charging equipment must be designed and located so as to not impede access or create any safety hazards. Equipment is subject to the lot and building regulations of the subject zoning district unless otherwise expressly stated.

a. Equipment shall be safe for use in inclement weather.

b. Equipment shall be protected by wheel stops, concrete filled bollards and curbing. Accessible charging equipment shall be protected by wheel stops and concrete filled bollards. All equipment shall be located in an easily accessible location for maintenance purposes.

c. Charging cables shall retract and shall not extend across walking paths to prevent hazards.

d. Emergency shut-offs / disconnects shall be provided and shall be a minimum of seventy-five feet (75') from all equipment.

e. A sound study shall be submitted if a Level 3 EVSE is installed within fifty feet (50') of a residential zoning district. The sound study shall demonstrate compliance with DGMC Section 28.10.040(b).

f. Equipment is permitted in all yards subject to screening requirements.

(4) Maintenance. Electric vehicle charging stations must be maintained in all respects, including the functioning of the equipment. A phone number or other contact information must be provided on the equipment for reporting when it is not functioning or when other problems are encountered.

(5) Screening. All transformers and current transformer cabinets shall be located on an appropriately designed concrete or other paved material pad and apron and shall be screened from view of streets and all abutting lots with a wall or solid fence at least six feet (6') feet in height. Enclosure doors shall be located and designed so that, to the maximum extent possible, they do not face towards an abutting property, sidewalk or street. Private electric vehicle charging stations are exempt from these screening requirements.

(6) Signage

a. Each electric vehicle charging parking space for public use must indicate that the space is reserved for the exclusive use of charging electric vehicles.

b. The accessible charging station must indicate that it is reserved for the use of persons with disabilities or must have a sign installed indicating that the station is an accessible EVSE that should be occupied last by users without disabilities.

c. All other signage associated with EVSE are subject to Article IX of this Chapter.

SECTION 17. That Section 28.7.020 of the Zoning Ordinance is hereby amended to read as follows:

Sec 28.7.020 Maximum Requirements.

~~Commercial~~ Non-residential uses requiring ~~one hundred (100)~~ fifty (50) or more parking spaces may not provide more than one hundred forty percent (140%) of parking in excess of the minimum standards as set forth in Table 7-1 ~~four and one-half (4.5) spaces per one thousand (1,000) square feet of floor area~~ unless otherwise approved through the special use approval process of DGMC Section 28.12.050. The special use permit application must include a parking study prepared by professional transportation planner or traffic engineer that includes, but is not limited to, the estimates of parking demand based on reliable data collected from comparable uses or on external data from credible research organizations (e.g., Institute of Transportation Engineers (ITE) or American Planning Association).

SECTION 18. That Section 28.7.030 of the Zoning Ordinance is hereby deleted in its entirety and amended to read as follows:

Sec 28.7.030 Minimum Motor Vehicle Parking Ratios.

Except as otherwise expressly stated, off-street ~~motor~~ vehicle parking spaces must be provided in accordance with Table 7.1 link

Table 7-1: Minimum Motor Vehicle Parking Requirements

~~USE CATEGORY~~	~~Minimum Motor Vehicle Parking~~
~~Subcategory~~	
~~Specific use (See DGMC Section 28.5.020)~~	
~~RESIDENTIAL~~	
~~Household Living (except for the following uses)~~	~~2 spaces per dwelling unit~~

~~Apartment/condo in DB, DC, FC and FB zoning districts~~	~~1.4 spaces per dwelling unit~~
~~Apartment/condo (for persons 62 or older)~~	~~0.6 spaces per dwelling unit~~
~~Apartment/condo (for persons 62 or older and offering on-site assisted living services)~~	~~0.4 spaces per dwelling unit~~
~~Apartment/Condo (Inclusive Dwelling Units provided for in the F Zoning Districts)~~	~~1 space per Inclusive Dwelling Unit~~
~~Group Living~~	~~0.5 spaces per bed~~
~~PUBLIC, CIVIC AND INSTITUTIONAL~~	
~~Aircraft Landing Area~~	~~per DGMC Section 28.7.040(g)~~
~~College or University~~	~~per DGMC Section 28.7.040(g)~~
~~Community Center~~	~~1 space per 4 occupants (maximum capacity)~~
~~Fraternal Organization~~	~~4 spaces per 1,000 square feet~~
~~Governmental Facility~~	~~per DGMC Section 28.7.040(g)~~
~~Hospital~~	~~per DGMC Section 28.7.040(g)~~
~~Library~~	~~5 spaces per 1,000 sq. ft.~~
~~Museum or Cultural Facility~~	~~2 spaces per 1,000 sq. ft.~~
~~Natural Resource Preservation~~	~~None~~
~~Parks and Recreation~~	
~~Park~~	~~5 spaces per acre~~
~~Swimming pool~~	~~10 spaces per 1,000 sq. ft. of water surface~~
~~Tennis court~~	~~2.25 per court~~
~~Religious Assembly~~	
~~Existing as of 01-14-1991 and located within 1,000~~	~~1 space per 8 occupants (maximum capacity)~~

~~feet of DC or DB zoning district~~	
~~All other~~	~~1 space per 4 occupants (maximum capacity)~~
~~Safety Service~~	~~per DGMC Section 28.7.040(g)~~
~~School~~	
~~Elementary and Junior High~~	~~0.10 spaces per student~~
~~Senior High~~	~~0.30 spaces per student~~
~~Utilities and Public Service Facility~~	
~~Minor~~	~~None~~
~~Major~~	~~per DGMC Section 28.7.040(g)~~
~~Wireless Telecommunications~~	~~None~~
~~COMMERCIAL~~	
~~Adult Entertainment Establishment~~	~~per DGMC Section 28.7.040G~~
~~Animal Service~~	~~3.5 spaces per 1,000 sq. ft.~~
~~Assembly and Entertainment (except for the following uses)~~	~~1 space per 3 occupants (maximum capacity)~~
~~Bowling alley~~	~~4 per lane, plus parking required by this section for restaurants, bars, and other affiliated uses~~
~~Commercial Service (except for the following uses)~~	~~3.5 spaces per 1,000 sq. ft.~~
~~Building service~~	~~1.17 spaces per 1,000 sq. ft.~~
~~Personal improvement services~~	~~4 spaces per 1,000 sq. ft.~~
~~Health club, fitness facility~~	~~5 spaces per 1,000 sq. ft.~~
~~Studio or instructional services~~	~~3.5 spaces per 1,000 sq. ft.~~
~~Research service~~	~~1.17 spaces per 1,000 sq. ft.~~

~~Day Care~~	~~2 spaces per 1,000 sq. ft., plus 1 drop-off or pick-up space per 1,000 sq. ft. (not to exceed a maximum of 10)~~
~~Eating and Drinking Establishment (except for the following uses)~~	~~10 spaces per 1,000 sq. ft. or 1 space per 4 seats, whichever is greater, plus stacking spaces per Section 7.130.~~
~~Carry-out restaurant~~	~~3.5 spaces per 1,000 sq. ft.~~
~~Restaurant with lounge~~	~~12.5 spaces per 1,000 sq. ft. or 1 space per 4 seats, whichever is greater~~
~~Financial Service~~	~~3.5 spaces per 1,000 sq. ft., plus stacking spaces per Sec. 7.130~~
~~Funeral or Mortuary Service~~	~~12.5 spaces per 1,000 sq. ft.~~
~~Lodging~~	~~1.25 spaces per room, plus parking required by this section for restaurants, bars, banquet facilities and other accessory uses~~
~~Office~~	
~~Business and professional office~~	~~3 spaces per 1,000 sq. ft.~~
~~Medical, dental and health practitioner~~	~~4.50 spaces per 1,000 sq. ft.~~
~~Parking, Non-Accessory~~	~~None~~
~~Retail Sales (except for the following uses)~~	~~3.50 spaces per 1,000 square feet~~
~~Furniture/large appliance store~~	~~1.67 spaces per 1,000 sq. ft.~~
~~Grocery store over 20,000 sq. ft.~~	~~4.0 spaces per 1,000 sq. ft.~~
~~Shopping center (multi-tenant)~~	~~4.0 spaces per 1,000 sq. ft.~~
~~Self-service Storage Facility~~	~~0.2 spaces per 1,000 sq. ft.~~
~~Trade School~~	~~1 space per 4 occupants (maximum capacity)~~
~~Vehicle Sales and Service~~	

Commercial vehicle repair and maintenance	1 per service bay, plus stacking spaces per Section 7.130.
Commercial vehicle sales and rentals	2 spaces per 1,000 sq. ft. of showroom area, plus 0.4 spaces 1,000 sq. ft. of outdoor display space, plus 2 per service bay
Fueling station	1 space per pump island, plus 1 space per service bay, plus 3.33 spaces per 1,000 sq. ft. of retail sales area, plus stacking spaces per Section 7.130.
Personal vehicle repair and maintenance	1 per service bay, plus stacking spaces per Section 7.130.
Car wash	1 per wash bay, plus stacking spaces per Section 7.130.
Personal vehicle sales and rentals	2 spaces per 1,000 sq. ft. of showroom area, plus 0.4 spaces 1,000 sq. ft. of outdoor display space, plus 2 per service bay
Vehicle body and paint finishing shop	1 per service bay, plus stacking spaces per Section 7.130.
WHOLESALE, DISTRIBUTION & STORAGE	0.67 spaces per 1,000 sq. ft.
INDUSTRIAL	1.17 spaces per 1,000 sq. ft.
RECYCLING	
Recyclable Material Drop-off Facility	per DGMC Section 28.7.040(g)
AGRICULTURE	
Community Garden	None
OTHER	
Drive-in or Drive-through Facility	Stacking spaces per DGME Section 28.7.130
Medical Cannabis Dispensing Organization	6 spaces per 1,000 sq. ft. (where shared parking is available) or 7.5 spaces per 1,000 sq. ft. (where shared parking is not available)
Medical Cannabis Cultivation Center	1.17 spaces per 1,000 sq. ft.

~~Adult Use Cannabis Dispensing Organization~~	~~6 spaces per 1,000 sq. ft. (where shared parking is available) or 7.5 spaces per 1,000 sq. ft. (where shared parking is not available)~~
~~Adult Use Cannabis Graft Grower~~	~~6 spaces per 1,000 sq. ft. (where shared parking is available) or 7.5 spaces per 1,000 sq. ft. (where shared parking is not available) for dispensary portion of business plus 1.17 spaces per 1,000 sq. ft. for non-dispensary areas of business~~
~~All other Adult Use Cannabis Business Establishments~~	~~1.17 spaces per 1,000 sq. ft.~~

~~(Ord. No. 5804, 12/17/19; Ord. No. 5706, 7/10/18)~~

SECTION 19. That Section 28.7.050 of the Zoning Ordinance is hereby amended to read as follows:

Section 28.7.050 Parking Exemptions And Reductions.

* * *

(b) Shared Parking.

* * *

(3) Methodology. The number of parking spaces required under a shared parking arrangement must be determined in accordance with the following:

a. Multiply the minimum parking required for each individual use, as set forth in DGMC Section 28.7.030 by the percentage identified for each of the six (6) designated time periods in Table 7-2.
b. Add the resulting sums for each of the six (6) columns.
c. The minimum shared parking requirement is the highest sum among the six (6) columns resulting from the above calculations.

d. Select the time period with the highest total parking requirement and use d. that total as the shared parking requirement.

Table 7-2: Shared Parking Calculations.

	Weekday			Weekend		
Land Use	Midnight–7:00 a.m.	7:00 a.m. – 6:00 p.m.	6 p.m. – Midnight	Midnight–7:00 a.m.	7:00 a.m. – 6:00 p.m.	6 p.m. – Midnight
Office and Industrial	5%	100%	10%	0%	60%	5%
Lodging	100%	60%	90%	100%	65%	80%
Eating and Drinking Establishments /Brewing Facility	50%	70%	100%	45%	70%	100%
Religious Assembly	0%	10%	30%	0%	100%	30%
Assembly & Entertainment	10%	50%	100%	5%	80%	100%
Retail Sales & Commercial Service	5%	70%	90%	0%	100%	60%

* * *

~~(e) Electrical Vehicle Parking. For any development, one (1) parking space or up to five percent (5%) of the total number of required spaces, whichever is greater, may be reserved for use by electrical vehicle parking. The number of required motor vehicle parking spaces is reduced by one (1) space for every parking space that is dedicated for electrical vehicle parking.~~

SECTION 20. That Section 28.7.060 of the Zoning Ordinance is hereby amended to read as follows:

Sec 28.7.060 Bicycle Parking.

(a) Minimum Requirements. Bicycle parking spaces must be provided in accordance with the minimum ratios established in

Table 7-3: Minimum Bicycle Parking.

Categories	Minimum Bicycle Parking Spaces (% of Motor Vehicle Parking)
Apartment / Condo	None for first 9 vehicle spaces, then 10% or 2 spaces, whichever is greater.
Community Center	None for first 9 vehicle spaces, then 10% or 2 spaces, whichever is greater
Library	None for first 9 vehicle spaces, then 10% or 2 spaces, whichever is greater
Museum or Cultural ~~Center~~Facility	None for first 9 vehicle spaces, then 10% or 2 spaces, whichever is greater
Parks and Recreation	None for first 9 vehicle spaces, then 10% or 2 spaces, whichever is greater
School (Elementary~~, and~~ Junior High and Senior High)	None for first 9 vehicle spaces, then 10% or 2 spaces, whichever is greater
~~School (Senior High)~~	~~None for first 9 vehicle spaces, then 10% or 2 spaces, whichever is greater~~
Assembly and Entertainment	None for first 19 vehicle spaces, then 5% or 2 spaces, whichever is greater
~~Health club, fitness facility~~ Health and Fitness Services	None for first 9 vehicle spaces, then 10% or 2 spaces, whichever is greater
Studio~~,~~ Instructional ~~or~~ Services	None for first 19 vehicle spaces, then 10% or 2 spaces, whichever is greater
Eating and Drinking Establishment	None for first 19 vehicle spaces, then 5% or 2 spaces, whichever is greater
Financial Service	None for first 19 vehicle spaces, then 5% or 2 spaces, whichever is greater

Categories	Minimum Bicycle Parking Spaces (% of Motor Vehicle Parking)
Office	None for first 19 vehicle spaces, then 5% or 2 spaces, whichever is greater
Retail Sales	None for first 19 vehicle spaces, then 5% or 2 spaces, whichever is greater

SECTION 21. That Section 28.7.070(c) of the Zoning Ordinance is hereby amended to read as follows:

* * *

Sec 28.7.070 Location of Off-Street Parking.

(c) Downtown and Fairview. Parking is prohibited in the street yard of any lot located within a DC, DB, ~~or~~ DT, FB, FC or FT zoning district except that parking is allowed on approved driveways serving detached houses, attached houses and two-unit houses.

(d)(2) Location. Off-site parking areas must be located within a one thousand foot (1,000') radius of the use served by such parking, measured between the entrance of the use to be served and the outer perimeter of the farthest parking space within the off-site parking lot. Off-street parking shall be connected to the use served by such parking via private or public sidewalks. Off-site parking lots are allowed only in zoning districts that permit the principal use to be served by the off-site parking spaces, unless approved as a special use. See Figure 7-2.

Figure 7-2: Off-Site Parking Location

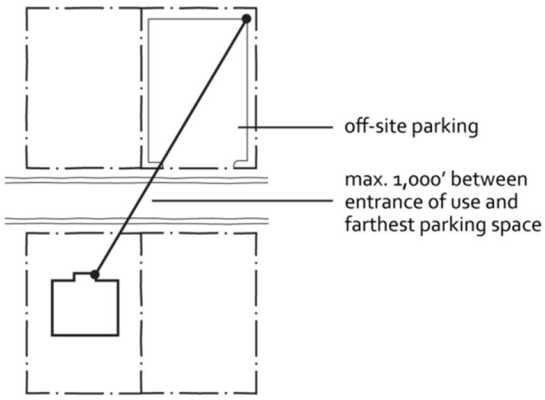

* * *

SECTION 22. That Section 28.7.100(b)(2) of the Zoning Ordinance is hereby amended to read as follows:

Sec 28.7.100 Parking Area Design.

* * *

(b)(2) Stall dimensions may be reduced by up to six inches (6") in width and length in commercial parking lots containing more than fifty (50) parking spaces or in multi-family residential developments if a parking study demonstrates that parking activity is projected at medium to low turnover conditions, defined as Class B or C by the Institute of Transportation Engineers (ITE), and that the typical parking space in such lot or structure will be occupied by no more than one (1) or two (2) different vehicles during the course of the business day. Stall size reductions are not allowed for parallel spaces.

SECTION 23. That Section 28.7.130(c) of the Zoning Ordinance is hereby amended to read as follows:

Sec. 28.7.130 Drive-Through and Drive-In Facilities.

* * *

(c) Stacking Spaces Required. Stacking lanes must be provided in accordance with the minimum requirements of Table 7-5

Table 7-5: Stacking Space Requirements.

Use	Minimum Number of Stacking Spaces Required
~~Bank/f~~Financial ~~institution~~Service	4 spaces per drive-through lane
Car wash (self-serve)	2 spaces per approach lane, plus 2 drying spaces at end of bay
Car wash (automatic)	10 spaces per approach lane, plus 1 drying space at end of bay and 1 additional space for any manual detailing/drying operations.
Vehicle repair/maintenance	2 per service bay (can be provided as parking spaces)
~~Gasoline pump~~ Fueling Station	~~2~~1 space~~s~~ per pump per side
Restaurant	8 total spaces, with at least 3 spaces between order and pick-up station
Other	3 spaces per lane, ordering station or machine

* * *

SECTION 24. That Section 28.8.010 of the Zoning Ordinance is hereby amended to read as follows:

Section 28.8.010 Purpose.

The landscaping and screening regulations of this Article establish minimum requirements for landscaping and screening. The regulations are intended to advance the general purposes of this ordinance and specifically to:

(a) enhance quality of life for residents and visitors;

(b) protect property values;

(c) enhance the quality and appearance of new development and

redevelopment projects;

(d) mitigate possible adverse impacts of higher intensity land uses abutting lower intensity land uses;

(e) promote the preservation, expansion, protection and proper maintenance of existing trees and landscaping;

(f) help ensure wise use of water resources;

(g) improve air quality;

(h) protect water quality and reduce the negative impacts of stormwater runoff by reducing impervious surface area and providing vegetated areas that filter and retain greater amounts of stormwater on site;

(i) moderate heat by providing shade; ~~and~~

(j) reduce the impacts of noise and glare~~.~~;

(k) enhance the ecological wellbeing of the community through enhanced biodiversity; and

(l) promote the planting of native plant species that provide natural habitat for pollinators and improve soil health.

SECTION 25. That Section 28.8.030(d) of the Zoning Ordinance is hereby amended to read as follows:

Section 28.8.030 Parking Lot Interior Landscaping.

* * *

(d) General

(1) Landscape material used to satisfy the parking lot interior landscaping requirements of this Section are subject to the landscape material and design regulations of DGMC Section 28.8.060.

(2) All landscaped islands and divider medians must ~~be crowned to~~ provide positive drainage or designed to comply with the Village's best

management practices for stormwater.

(3) At least ~~fifty percent (50%)~~seventy five percent (75%) of every landscape island and landscape divider median must be planted with live plant material, such as perennials, ground cover, ornamental grasses, or shrubs~~, or turf grass~~ to a maximum height of thirty inches (30~~"~~") at maturity. Any area not planted with live plant material shall contain organic, biodegradable mulch. Turf grass and impervious materials such as asphalt and concrete are prohibited in landscape islands and divider medians.

(4) Interior landscape islands and divider medians that meet the requirements of this Section that have a surface area of five hundred (500) square feet or more, as measured from the back of curb to back of curb, may be counted toward satisfying zoning district landscaped open space requirements.

(5) The installation of bioswales for landscaping and stormwater management purposes is encouraged within larger, continuous landscape islands. Installation of native, flood-tolerant plants is encouraged to ensure healthy plants within bioswales.

SECTION 26. That Section 28.8.040(b) of the Zoning Ordinance is hereby amended to read as follows:

Sec 28.8.040 Screening.

* * *

(b) Ground-mounted Mechanical Equipment. All ground-mounted mechanical equipment over thirty inches (30") in height must be screened from view by a fence, wall, dense hedge, or combination of such features providing at least eighty percent (80%) direct view blocking. Fencing expressly excludes chain link with vertical slats or woven mesh. The hedge, fence or wall must be at least as

tall as the tallest part of the equipment. The hedge must be this tall at the time of planting. See Figure 8-12.

(c) Roof-mounted Mechanical Equipment. Exterior roof access ladders, placed on an exterior facade, are expressly prohibited in the Village. Alternative ~~R~~roof-mounted mechanical equipment (e.g., air conditioning, heating, cooling, ventilation, exhaust and similar equipment, ~~but not~~excluding solar panels, wind energy or similar renewable energy devices) must be screened from ground-level view in one of the following ways (and as illustrated in Figure 8-13):

(1) a parapet that is as tall as the tallest part of the equipment;
(2) a screen around the equipment that is at least as tall as the tallest part of the equipment, with the screen providing at least eighty percent (80%) direct view blocking and which is an integral part of the building's architectural design; or
(3) an equipment setback from roof edges that is at least three feet (3') in depth for each one foot (1') ~~foot~~ of equipment height.

* * *

SECTION 27. That Section 28.8.060 of the Zoning Ordinance is hereby amended to read as follows:

Section 28.8.060 Landscape Material And Design.

(a) *Landscaping with Required Landscape Areas*. All required landscape areas must be sodded or seeded with turf grass or appropriate ground cover. Alternatives that comply with the Village's best management practices for stormwater are also allowed. Areas not required to be covered with live plant material must be covered with organic, biodegradable mulch. Limiting the amount of turf grass installed is encouraged.

(b) *Existing Trees and Vegetation*. Existing non-invasive shrubs and trees may be counted toward satisfying the landscaping and screening regulations of this Article if they are located within the subject area and they comply

with the plant height and size requirements of this Section.

(c) Plant Selection

(1) Trees and plants selected for required landscape areas must be well-suited to the microclimate and on-site soil conditions.

(2) Trees and plant material must comply with the specifications found in American Standards for Nursery Stock (ASNS).

(3) ~~Invasive species may not be used to meet landscape requirements~~. Invasive species listed in the current Illinois Exotic Weeds Act (525 ILCS 10/1 et. al.) are prohibited from installation.

(4) At least eighty percent (80%) of all plant materials shall be species that are native to northeastern Illinois to promote biodiversity and ecological resistance.

(5) For each plant group (canopy tree, ornamental tree, evergreen tree, etc.) there shall be no more than twenty-five percent (25%) of the same genus.

~~(4)~~(6) All plant materials are subject to the approval of the ~~Community Development Director~~Village Forester.

(d) Trees

(1) Ornamental. Ornamental trees used to satisfy the requirements of this Article must be at least ~~four feet (4')~~six feet (6') in height at time of installation.

(2) Shade. Shade trees used to satisfy the requirements of this Article must be a minimum two ~~and one half~~ inch (2~~.5~~") caliper at time of installation.

(e) Shrubs. Shrubs used to satisfy the requirements of this Article must be at least eighteen inches (18") in height at time of installation.

(f) Ornamental Grasses and Perennials. Ornamental grasses and perennials used to satisfy the requirements of this Article must be at least twelve

inches (12") ~~inches~~ in height at time of installation.

(g) Curbs and Vehicle Barriers. Landscaped areas in or abutting parking lots must be protected by concrete curbing, anchored wheel stops, or other durable barriers approved by the Community Development Director. ~~Alternative b~~Barrier designs that provide improved infiltration or storage of stormwater are permitted~~encouraged~~. Curbs protecting landscape areas may be perforated, and encouraged to have gaps or otherwise be designed to allow stormwater runoff to pass through them.

(h) Installation

(1) All landscaping must be installed in a sound manner and in accordance with accepted landscape planting practices.

(2) Newly planted trees may not be staked or guyed unless they are unable to stand upright without support. Any staking and guying materials must be removed within one (1) year of installation.

(i) Maintenance. The property owner, occupant, tenant and respective agent of each, if any, are jointly and severally responsible for the maintenance and protection of all required landscaping, in accordance with all of the following regulations:

(1) Landscaping must be kept reasonably free of visible signs of insects and disease and appropriately irrigated to enable landscaping to exist in a healthy growing condition.

(2) Landscaping must be mowed or trimmed in a manner and at a frequency appropriate to the use of the material and species on the site so as not to detract from the appearance of the general area. Growth of plant material at maturity must be considered where future conflicts such as view, signage, street lighting, utilities and circulation might arise.

(3) All landscaping must be maintained to minimize property damage and public safety hazards, including removal of invasive species,

dead or decaying plant material, and removal of low-hanging branches next to sidewalks and walkways obstructing street lighting.

(4) All pruning must be done in accordance with ANSI A300 (part 1) "Standards for Tree Care Operations—Pruning." Tree topping is prohibited. Crown reduction pruning may be used instead to reduce the height of a tree when necessary. Topped trees may not be counted toward tree planting requirements.

(5) Property owners are encouraged to manage, control or eradicate all noxious weed species currently identified by the Illinois Department of Natural Resources such that they prevent seed set and active spread beyond their property lines.

(6) On commercial properties, only drip irrigation is permitted in non-turf grass areas.

~~(5)~~(7) Failure to maintain landscaping is a violation of this ordinance.

SECTION 28. That Section 28.8.080 of the Zoning Ordinance is hereby added as follows:

Sec 28.8.080 Landscaping Requirement for Residential Development.

All applications for a building permit for the construction of a new detached house, attached house or two-unit house shall comply with the provisions in DGMC Section 7.2300.

SECTION 29. That Section 28.9.020 of the Zoning Ordinance is hereby amended to read as follows:

Sec 28.9.020 Prohibited Signs And Sign Characteristics.

The following are expressly prohibited under this ordinance:

a) any sign or structure that constitutes a hazard to public health or safety;

b) any signs attached to utility, traffic signal poles, light poles, or standards except for governmental signs;

c) signs, that by their color, location, or design resemble or conflict with traffic control signs or signals;

d) except for governmental signs erected by, or on behalf of, the unit of government having jurisdiction, no sign may be located on the public right-of-way, or affixed to or upon public property. This prohibition includes any sidewalk, parkway, crosswalk, curb, curbstone, street lamppost, hydrant, tree, shrub, tree stake or guard, electric light or power, CATV, telephone or telegraph system, fire alarm, lighting system, public bridge, drinking fountain, trash receptacle, street sign or traffic sign;

e) portable signs, except for sandwich board signs that are allowed in the DC, DB, DT, FC, FB or FT zoning districts;

f) vehicle signs when the vehicle is not licensed, insured or operational;

g) advertising off-premise signs;

h) moving signs;

i) ~~LED and~~ flashing signs;

j) signs with bare bulb illumination, except for marquees located in the DC, DB, DT, FC, FB or FT zoning districts;

k) attention-getting devices;

l) signs containing exposed gas tubing, exterior to the building, including argon and neon;

m) roof signs;

n) box-type signs in the DC, DB, DT, FC, FB or FT zoning districts;

o) any sign that advertises, identifies, or pertains to a business no longer conducted, or a product no longer sold, on the premises where such sign is located, within the previous thirty (30) days;

p) any sign painted directly on a wall, roof, or fence;

q) any sign placed or attached to a telecommunications tower, pole or antenna;

r) signs containing manual changeable copy consisting of more than two (2) lines, except that fueling stations, governmental agencies, schools and religious assembly uses have up four (4) lines of manual changeable copy. The changeable copy surface area is included in the total surface area allowed;

~~s) signs containing electronic changeable copy/message board;~~

~~t)~~ s) single pole signs with a base of less than two feet (2') in width; and

~~u)~~ t) any other sign not expressly permitted in this Article.

SECTION 30. That Section 28.9.050 of the Zoning Ordinance is hereby amended to read as follows:

Sec 28.9.050 Sign Regulations Generally.

The regulations of this Section apply to signs in all areas of the Village except the DC, DB, DT, FC, FB and FT zoning districts.

a) *Maximum Total Sign Area*. The maximum allowable sign area may not exceed one and one half (1.5) square feet per linear foot of tenant frontage, plus any signs expressly excluded from maximum sign area calculations. Buildings set back more than three hundred feet (300') from the abutting street right-of-way are allowed a maximum allowable sign area of two (2) square feet per linear foot of tenant frontage, plus any allowed excluding menu boards, window and temporary signs. In no case,

may a single tenant exceed three hundred (300) square feet in total sign surface area.

b) *Monument Signs and Shingle Signs*. Unless otherwise expressly stated, each lot is allowed either one (1) monument sign or one (1) shingle sign.

(1) Monument Signs

a. Monument signs are limited to a maximum of two (2) sign faces and are subject to the height and area limitations of Table 9-1.

Table 9-1: Monument Sign Height and Area Regulations

	Lot Size		
Monument Sign Regulations	Less than 100 ft. Lot Width	100–259 ft. Lot Width	260 ft. or Greater Lot Width and at Least 2.5 Acres in Area (B-3 District Only)
Maximum Height (feet)	8	10	15
Maximum Area (sq. ft.)	24	36	60

b. Monument signs must be set back at least ten feet (10') from all street rights-of-way and at least twenty-five feet (25') from all other lot lines. Monument signs that are greater than ten feet (10') in height and thirty-six (36) square feet in size must be set back at least one hundred feet (100') from interior (non-street) lot lines.

c. Monument signs are subject to the intersection visibility regulations of DGMC Section 28.10.020.

d. Monument signs must display the address number of the subject property with numbers or characters between eight inches (8") and ten inches (10") in height. Address numbers are excluded when calculating the area of the monument sign.

e. Lots with more than one (1) street frontage are allowed two (2)

monument signs, provided the signs are located on different street frontages and separated by a minimum distance of one hundred feet (100'). Only one (1) monument sign may be a digital copy sign and is subject to the provisions of DGMC Section 28.9.070(f).

f. The base of all monument signs must be landscaped. Every permit application for a monument sign must be accompanied by a landscape plan demonstrating compliance with the following standards:

1. Signs must be surrounded by a landscaped area of at least three feet (3') in width, measured outward from the face of the sign.

2. Landscaping within the required landscape area must consist of shrubs, evergreens, perennial or annual flowers, ornamental grasses, vegetative ground cover or some combination of such live plants. Sodded, seeded, mulched or rocked areas may not be counted as meeting these monument sign landscaping requirements.

3. Monument sign landscaping is subject to the landscape maintenance provisions of DGMC Section 28.8.060(i).

(2) Multi-tenant Shopping Centers

a. Multi-tenant shopping centers located on lots with more than five hundred feet (500') of street frontage are allowed two (2) monument signs, provided the signs are separated by a minimum distance of two hundred feet (200'). Such signs may not exceed fifteen feet (15') in height or sixty (60) square feet in area and must contain the names of more than one (1) tenant. A shopping center tenant's panel sign is not counted toward allowable sign surface area. Only one (1) shopping center sign may be a digital copy sign and is subject to the provisions of DGMC Section 28.9.070(f).

b. Multi-tenant shopping centers located on lots with one hundred feet (100') to five hundred feet (500') of street frontage are allowed

a maximum of one (1) monument sign. The sign may not exceed ten feet (10') in height or thirty-six (36) square feet in area and must contain the names of more than one (1) tenant. A shopping center tenant's panel sign is not counted toward allowable sign surface area.

c. Multi-tenant shopping centers located on lots with less than one hundred feet (100') of street frontage age are allowed a maximum of one monument sign. The sign may not exceed eight feet (8') in height or twenty-four (24) square feet in area and must contain the names of more than one (1) tenant. A shopping center tenant's panel sign is not counted toward allowable sign surface area.

(3) Tollway Corridor. Signs on lots abutting the right-of-way of I-88 or I-355 are subject to all regulations of this Article, with the following exceptions:

a. In addition to the monument sign otherwise allowed by DGMC Section 28.9.050(b), one (1) additional monument sign is allowed for lots with a minimum frontage of one hundred feet (100') along the tollway or on IDOT frontage along the tollway.

b. The additional monument sign must be placed adjacent to the tollway and may not exceed two hundred twenty-five (225) square feet in area or twenty feet (20') in height. The additional monument sign will not be counted in calculating the lot's total sign area.

c. Monument signs must be separated by a minimum distance of thirty feet (30') from any existing tollway signs.

d. Digital copy signs are expressly prohibited as a Tollway Corridor monument sign.

SECTION 31. That Section 28.9.070 of the Zoning Ordinance is hereby amended to read as follows:

Sec 28.9.070 Special Sign Types.

* * *

(f) Digital Copy Signs.

(1) Where Allowed. Digital copy signs are permitted in all Business and Employment Districts (B-1, B-2, B-3, O-R, O-R-M, M-1 and M-2) and Institutional Districts (INP-1 and INP-2).

(2) A digital copy sign shall be constructed as a monument, freestanding or multi-tenant shopping center sign type only.

(3) The digital sign area shall comply with sign area regulations identified in DGMC Section 28.9.050.

(4) The digital sign height shall comply with sign regulations identified in DGMC Section 28.9.050.

(5) Only one (1) monument, freestanding or multi-tenant shopping center sign may be a digital copy sign, per DGMC Section 28.9.050.

(6) The setback of digital copy signs shall comply with regulations identified in DGMC Section 28.9.050. Additionally, no digital copy sign shall be located within 100 feet of a principal residential structure, regardless of the zoning district that the principal residential structure is located in.

(7) Digital copy signs must be oriented perpendicular to the roadway.

(8) The area immediately adjacent to a digital copy sign shall be landscaped in accordance with regulations identified in DGMC Section 28.9.050(b)(1)(f).

(9) Only high resolution, full color electronic displays are allowed. Digital copy signs shall be maintained in 'like new' operating condition, or cease operation of the sign.

(10) Operational Standards

a. Digital copy sign shall have a static display only. Scrolling, fading, flashing, animation, or video is prohibited.

b. Sound from digital copy signs is prohibited.

c. Messages must be displayed for a minimum of ten (10) seconds.

d. The message change shall be a full screen replacement without fading, motion or other action techniques.

e. All digital copy sign components shall be in full color with a minimum pitch resolution of 16 millimeter spacing or better.

f. Digital copy signs must use auto-dimming photocell technology or a similar device that automatically adjusts the display brightness based on ambient lighting conditions. Brightness shall be limited to 0.3 footcandles maximum above ambient lighting conditions at a distance of 100 feet from each face of the sign. Manufacturer's product data and specification for the digital copy sign, including written certification verifying auto-dimming function set to 0.3 footcandles maximum above ambient lighting conditions shall be provided.

g. In case of a mechanical failure, the digital copy sign shall be designed to default to a static display.

(g) Marquee Signs

(1) In lieu of a permitted wall sign, one (1) marquee sign is permitted in any zoning district when associated with an allowed cinema or live music entertainment venue use.

(2) A marquee sign may contain digital copy.

(3) The total sign area of a marquee sign shall not exceed three (3) square feet per one (1) lineal foot of tenant frontage or three-hundred (300)

square feet, whichever is less. The total surface area of each face of the marquee sign is measured for the purposes of measuring total marquee sign area. The area of permanent lettering on a marquee sign shall be counted in determining sign area for the marquee sign. Any permanent lettering that is attached to the marquee may not extend more than twelve (12) inches from the vertical plane of the marquee to which it is attached.

(4) A marquee sign shall comply with the digital copy sign operational standards shown in DGMC Section 28.9.070(f)(7).

(5) A marquee sign must be placed to allow at least eight feet (8') of vertical clearance above the ground directly beneath the sign.

(6) A marquee sign may extend no more than five (5) feet from the building wall into the public right-of-way, subject to an Encroachment License Agreement approved by the Village Attorney, but no closer than one (1) foot from any curb line.

SECTION 32. That Section 28.10.010 of the Zoning Ordinance is hereby amended to read as follows:

Sec 28.10.010 Fences.

(a) General. The general regulations of this subsection apply to all fences.

(1) Applicability. All fences, including plants and walls in the nature of a fence, must be erected and maintained in conformance with the requirements of this Section.

(2) Permits Required. It is unlawful to erect or alter any fence within the Village unless a permit has been issued by the Community Development Director. A written application for a fence permit, including applicable fees as established in the User-Fee, License & Fine Schedule must be filed with

the Community Development Department. A fence permit issued under this Section is valid for a term of six (6) months.

(3) Public Safety. Fences may not be constructed or maintained in any way that would impair public protection services or impair public safety by obstructing the vision of persons using the street, sidewalks or driveways.

(4) Structural Elements. All fences must be constructed so that fence posts and structural elements are located on the side of the fence facing the property being enclosed.

(5) Open-Design Fences. Open design fences must be constructed in such a manner that no post or vertical and horizontal element exceeds a width of six inches (6"), and the open area is not less than fifty percent (50%) of the closed area, with the open area distributed uniformly over the entire fence surface. Open-design fences include split rail, post and board and similar designs, expressly excluding chain-link (with slats), shadow box and woven mesh fences.

(6) Solid-Design Fences. Shall be a continuous, unbroken design with no open spaces between material, which may include, post and board, shadowbox and similar designs. Chain-link fences with vertical slats or woven mesh are expressly excluded.

* * *

(2) Side and Rear Yards. The regulations of this subsection apply to fences in the side and rear yards of lots located in R districts.

(a) Fences, including chain-link and woven mesh designs, are permitted in side and rear yards and required setbacks. Fences in side and rear yards may not exceed six feet (6') in height. In residential districts abutting nonresidential districts, fences of up to eight feet (8') in height and ~~closed in design~~solid design fences may be erected only in the side and rear yards of the residential district properties that abut the nonresidential districts. On double-frontage lots, when the rear of any principal

structure located on the lot faces a street, and all directly abutting lots share this layout, the yard along that street frontage is considered a rear yard for purposes of these fence regulations. On double-frontage lots, when the rear of any principal structure located on the lot faces a street, and one or more directly abutting lots has the front of a principal structure that faces the same street, the fence must adhere to the yard requirements of the front facing principal structure.

(b) On lots where one street frontage is along a street and the opposite frontage is along an alley, when the rear of any principal structure located on the lot faces a street, and the front of the principal structure faces an alley and one or more directly abutting lots has the same layout, the yard along the public alley is considered a street yard for purposes of these fence regulations; while the yard facing the street is considered a rear yard.

~~b~~. (c) On corner lots with three (3) lot lines abutting a street, fences up to six feet (6') in height, including chain-link and woven mesh designs, are permitted only within the two (2) street-facing side yard areas located from the rear building line to the rear lot line. Any fences outside this area are subject to a maximum height limit of four feet (4').

* * *

SECTION 33. That Section 28.10.030 of the Zoning Ordinance is hereby amended to read as follows:

Section 28.10.030 Outdoor Lighting.

(a) *Purpose*. The outdoor lighting standards of this Article are intended to protect the public health and general welfare, reduce light pollution, minimize unnecessary upward light emissions (skyglow), limit light trespass onto adjacent properties, protect nocturnal wildlife habitats, and reduce energy waste, by controlling the adverse impacts of glare and light trespass associated with poorly shielded or inappropriately directed

lighting fixtures.

(b) Applicability. Unless otherwise expressly exempted, the regulations of this Article apply to all uses.

(c) Exemptions. The following are expressly exempt from the outdoor lighting regulations of this Article:

(1) temporary ~~holiday~~seasonal decorative light displays installed for no more than ninety (90) consecutive days;

(2) outdoor light fixtures producing light directly by the combustion of fossil fuels, such as, kerosene lanterns or gas lamps;

(3) landscape accent lighting;

(4) Village street lights;

(5) illumination of official government flags; and

(6) construction and emergency lighting used by construction workers or police, firefighting, or medical personnel, provided the lighting is temporary and is discontinued immediately upon completion of the construction work or abatement of the emergency requiring the lighting.

(7) Lighting for outdoor athletic fields on public property and temporary uses.

(d) Exterior Lighting Plan. An outdoor lighting plan must be prepared by a professional lighting consultant and submitted to the Community Development Director for approval. The lighting plan must be reviewed to determine whether the proposed outdoor lighting complies with the regulations of this Section. The plan must include at least the following information:

(1) a photometric study and data on the types of lighting fixtures to be used;

(2) location of and catalog cut-sheet data for all proposed light fixtures, including those used for site lighting, canopy lighting and exterior building lighting;

(3) calculations showing contours of individual illumination values in foot-candles. The contours must include property lines and at least five feet (5') beyond; and

(4) a summary calculation table showing average foot-candles, minimum foot-candles, maximum foot-candles, average-minimum uniformity ratio, lumens per net acre, correlator color temperature for all luminaries and foot-candles at property lines and at least five feet (5') beyond.

(e) General Regulations and Standards

(1) Flashing, revolving, or intermittent exterior lighting visible from any property line or street is prohibited.

(2) High-intensity light beams, such as outdoor searchlights and lasers are prohibited.

(3) All luminaires emitting more than one thousand (1,000) lumens shall be zero uplight, except for luminaires that are used for flags, façade or sign illumination which are shielded and aimed, such that their direct light emission is contained to the architectural target.

(4) The total light output from all luminaires used for outdoor lighting on any lot of record in a non-residential zoning district shall not exceed one hundred thousand (100,000) lumens per net acre. Lighting installations located under canopies shall only contribute fifty percent (50%) toward this limit.

(5) All new and replacement outdoor luminaires shall have a Correlated Color Temperature (CCT) not to exceed three thousand (3,000) Kelvin.

(6) Fixtures certified under the DarkSky Approved Luminaires or DesignLights Consortium's (DLC) Light Usage for Night Applications (LUNA) are encouraged.

(f) Glare. All outdoor lighting must be directed, shaded, shielded, or otherwise located and designed to minimize perceived glare on adjacent properties and streets.

* * *

(h) Light Fixture Mounting Height. Parking lot light fixtures in R zoning districts may not exceed twenty feet (20') in height. Parking lot light fixtures in nonresidential districts may not exceed thirty feet (30') in height. All parking lot lighting shall direct all light downward with no uplighting.

* * *

SECTION 34. That Section 28.11.020 of the Zoning Ordinance is hereby amended to read as follows:

Section 28.11.020 Non-Conforming Lots.

(a) Description. A nonconforming lot is a lot that was lawfully created in accordance with lot area and lot width regulations in effect at the time of the lot's establishment but that does not comply with currently applicable lot area or lot width regulations.

(b) Use of and Building on Nonconforming Lots

(1)A nonconforming lot in an R district ~~may be used improved with a single detached house~~ may be improved with any residential use allowed in the subject zoning district or accessory structure, subject to compliance with applicable lot and building regulations other than those pertaining to lot area and lot width, provided that when a structure is constructed across common lot lines of two (2) or more contiguous nonconforming lots that are held in common ownership, the lots must be consolidated in order to meet or come closer to meeting applicable minimum lot area

and lot width requirements. Except that lot consolidations are not required for decks, front porches and stoops or when:

a. an addition does not exceed three hundred fifty (350) square feet; or

b. an addition does not include the installation of a foundation, footers or piers; or

c. the construction of an accessory structure is less than eight hundred (800) square feet.

(2) Nonconforming lots in nonresidential districts may be improved with any use allowed in the subject zoning district, provided that:

a. the lot area is ~~not less than~~ seventy-five percent (75%) or more of the minimums required in the subject zoning district, or the lot width is at least ~~not less than~~ fifty feet (50') and the lot area is ~~not less than~~ at least seven thousand five hundred (7,500) square feet;

b. if the zoning allows a variety of uses or a variety of intensities of uses and one or more uses or intensities would comply with applicable lot area and lot width standards, while others would not, then only the uses or intensities that comply with applicable standards are permitted.

c. when a structure is constructed across common lot line(s) of two (2) or more contiguous nonconforming lots are held in common ownership, the lots must be consolidated in order to meet or come closer to meeting applicable minimum lot area requirements.

(3) All flag lots lawfully created before March 18, 2008 are deemed nonconforming lots. In addition to complying with the other nonconforming lot provisions of this Section, nonconforming flag lots are subject to the following additional requirements:

a. the pole of the flag lot must be at least twenty feet (20') in width;

b. an access corridor, including a paved surface with a width of at least ten feet (10'), must be maintained along the entire length of the pole. No encroachments that would interfere with emergency vehicle access are allowed within this access corridor;

c. the street setback must be measured from a line parallel to the street where the lot meets the minimum width requirement of the subject zoning district;

d. the address of the flag lot must be clearly displayed within three feet (3') feet of the property line adjacent to the public street and in a manner that clearly differentiates the flag lot from abutting property; and

e. if there is no fire hydrant located within sixty feet (60') of the street property line of the pole section of the flag lot, a fire hydrant must be installed at the property owner's expense. If a new hydrant is required, it must be operational prior to issuance of an occupancy permit. The fire department may, in its sole discretion, permit the property owner to install a dry-system standpipe on the flag lot property instead of requiring a new hydrant to be installed.

(4) All lots created by lot split before May 16, 2006 may be improved provided any such improvement complies with the lot and building regulations of the subject zoning district, provided that:

a. the lot area and lot width are not less than seventy-five percent (75%) of the minimums required in the subject zoning district; or

b. the lot width is not less fifty feet (50') and the lot area is not less than seven thousand five hundred (7,500) square feet.

(5) Lawfully established buildings and improvements on nonconforming lots may be used, maintained, repaired and replaced, provided that the amount, quantity or degree of any existing nonconformity is not increased and no new nonconformity is created.

SECTION 35. That Section 28.12.050 of the Zoning Ordinance is hereby amended to read as follows:

Sec 28.12.050 Special Uses.

* * *

(i) Lapse of Approval

(1) The applicant may submit, and the Village Council may approve, as part of the ordinance authorizing the special use, a maximum 2-year schedule for establishing the approved special use. If such a schedule is not approved by the Village Council, the approved special use will lapse and have no further effect one (1) year after it is approved by the Village Council, unless:

a. a building permit has been issued (if required);
b. a certificate of occupancy has been issued; or
c. the special use has been lawfully established.

(2) The Village Council is authorized to extend the expiration period for good cause on up to two (2) separate occasions, by up to six (6) months each. Requests for extensions must be submitted to the Community Development Director and forwarded to the Village Council for a final decision.

(3) A special use also lapses upon revocation of a building permit or a certificate of occupancy for violations of conditions of approval or upon expiration of a building permit to carry out the work authorized by the special use.

(4) If any special use is discontinued or not in operation for a continuous period of six (6) months or more, the special use for such use is void, and such use may not be reestablished unless and until a new special use is obtained in accordance with the procedures of this Section.

(5) A special use granted in conjunction with the approval procedures set forth in DGMC Section 28.12.040 for Planned Unit Developments does not expire.

* * *

(k) Amendments. Amendments to approved special uses may be approved in accordance with the following requirements. The special use amendment procedures may not be used to vary or modify zoning ordinance standards.

(1) Minor Amendments

a. The Community Development Director is authorized to approve the following minor amendments to approved special uses:
   1. any amendments expressly authorized as minor amendments at the time of special use approval;
   2. the addition of customary accessory uses and structures; and
   3. changes to the development site or to structures necessitated by engineering, architectural or physical limitations of the site that could not have been foreseen at the time the special use permit was approved and that are not otherwise classified as major amendments pursuant to DGMC Section 28.12.050(k)(2).

b. Applications for minor amendments to approved special uses must be filed in a form established by the Community Development Director. If no action is taken on the minor amendment application within twenty (20) days of filing of a complete application, the minor amendment is deemed denied.

(2) Major Amendments

a. All of the following constitute major amendments to approved special uses:
    1. an increase in overall building coverage by more than five percent (5%);
    2. an increase in building height by more than ten percent (10%) or five feet (5'), whichever is less;
    3. ~~an overall reduction in the amount of common open space or landscaping~~ an overall reduction in the amount of usable open space, common open space or landscaping by more than five percent (5%);
    4. a reduction in off-street parking by more than ten percent (10%) or one space, whichever results in a greater reduction;
    5. a change in the vehicle circulation pattern that would increase points of access, change access to another street or increase projected traffic volumes; and
    6. any combination of three (3) or more minor changes that were not expressly authorized by the approved special use permit.

b. Major amendments to an approved special use must be processed as a new special use application, including all requirements for fees, notices and public hearings.

* * *

SECTION 36. That Section 28.14.080 of the Zoning Ordinance is hereby amended to read as follows:

Sec. 28.14.080 Building Coverage.

Building coverage is measured as the area of the lot that is occupied by principal and accessory buildings and by structures with a surface area of more than four (4) square feet and a height of eighteen inches (18") or more, including pergolas and pools. All areas beneath a roof are counted for purposes of measuring building coverage, except on FT or R-zoned lots with a lot width of sixty feet (60')

or less, detached garages, Accessory Dwelling Units~~Extended Family Accessory Housing~~ or Home Occupation units in the rear yard and rear-loading attached garages with a building footprint of five hundred (500) square feet or less are not counted towards overall building coverage provided that the detached garage, Accessory Dwelling Units~~Extended Family Accessory Housing~~ or Home Occupation units in the rear yard or the rear-loading attached garage is the only garage or unit on the subject property. If the building footprint for the previously listed uses exceeds five hundred (500) square feet, it is no longer exempt from the building coverage calculation.

SECTION 37. That Section 28.14.100(b) of the Zoning Ordinance is hereby amended to read as follows:

Sec. 28.14.100 Setbacks.

* * *

Table 14-1: Permitted Yard Obstructions

Obstruction/Projection	Permitted in these Yards		Minimum Setback/Maximum Encroachment into required setback		
	Corner	Street	Side	Rear	
A/C units, generators, compressors, transformers, associated equipment, Residential Energy Storage System Equipment, BMWES equipment, FSWES equipment, rainwater collection and geothermal equipment (ground-mounted)	No	No[1]	Yes	Yes	~~10 ft. min. setback in R-1 7 ft. min. setback in R-2 6 ft. min. in R-3, R-5, R-5A, R-6 5 ft. min. setback in all other districts~~ 5 foot minimum setback in R-4 district. 6 foot setback in all other districts

Air conditioner (window unit only)	Yes	Yes	Yes	Yes	No setback required
Antenna, amateur radio	No	No	No	Yes	Ground mounted only; 5 foot. Minimum, setback in R-4 district. 6 foot minimum. setback in all other districts
Antenna, receive-only and satellite dish	Yes	Yes	Yes	Yes	
Arbor, pergola or trellis	Yes	Yes	Yes	Yes	5 foot. Minimum. setback in R-4 district. 6 foot minimum. setback in all other districts
Architectural building features (e.g., sills, belt courses, cornices, wing walls)	Yes	Yes	Yes	Yes	No setback in DB, DC, FC and FB. 1.5 foot. maximum. encroachment if setback is < 6 foot. 2 foot. maximum. encroachment if setback is ≥ 6 foot.
Awning, canopy architectural light shelf or solar shading device	Yes	Yes	Yes	Yes	1.5 foot. maximum. encroachment if setback is < 6 foot. 2 foot. maximum. encroachment if setback is ≥ 6 foot. (nonresidential districts - 2.5 foot. maximum. encroachment in street setback)
Balcony	Yes	Yes	Yes	Yes	Must meet required district street and side yard setbacks. 10 foot. maximum. encroachment in rear yard.
Basketball standards and backboards	Yes	Yes	Yes	Yes	

Bay window (1st floor only; with or without foundation)	Yes	Yes	Yes	Yes	Street setback - 1.5 foot. maximum. encroachment. Side setback - 1.5 foot. Maximum. encroachment if setback is < 6 foot. or 2 foot. maximum. encroachment if setback is ≥ 6 foot. Rear setback - 2.5 foot. maximum. encroachment
Bicycle Parking	Yes	Yes	Yes	Yes	5 foot. minimum. setback in R-4 district. 6 foot. minimum. setback in all other districts
Breezeway	No	No	No	Yes	10 foot. maximum. Encroachment
Chimney	Yes	Yes	Yes	Yes	1.5 foot. maximum. encroachment if setback is < 6 feet. . 2 foot. maximum. encroachment if setback is ≥ 6 feet.
Clothesline	No	No	Yes	Yes	5 foot. minimum. setback
Compost pile or container (See Chapter 13 of this Code)	No	No	Yes	Yes	5 foot. min. setback in R-4 district. 6 foot. minimum. setback in all other districts
Deck or patio, uncovered and open-air (see also “porch,” below) [2]	Yes	Yes	Yes	Yes	5 foot. maximum. encroachment in street setback. 5 foot. minimum. setback in side and rear property line
Dog house or dog run	No	No	No	Yes	No setback in DB, DC, FC and FB districts. 5 foot. min. setback in R-4 district. 6 foot. minimum. setback in all other districts

Driveway or uncovered walk	Yes	Yes	Yes	Yes	No setback in DB, DC, FC and FB districts. 1 foot minimum (interior) or rear setback
Eaves and gutters	Yes	Yes	Yes	Yes	In street setback and rear setback - 2.54 foot maximum encroachment. In side setback - 2 foot. maximum encroachment
Electric vehicle charging equipment	Yes	Yes	Yes	Yes	In front and rear - 2.5 foot maximum encroachment. In side - 2 foot maximum encroachment
Fence	Yes	Yes	Yes	Yes	See also DGMC Section 10.010
Fire escape (open or lattice enclosed, fireproof outside stairways)	Yes	Yes	Yes	Yes	2 foot maximum Eencroachment
Fireplace, fire pit, outdoor cooking/kitchen areas (See Chapter 13 of this Code)	Yes[3]	No	Yes	Yes	5 foot minimum setback in R-4 district 6 foot. minimum setback in all other districts. Must meet required R district street setback in corner yards.
Flag pole	Yes	Yes	Yes	Yes	Equal to the height of the pole; no maximum encroachment of flag beyond lot line.
Garage (detached)[4]	No	No	Yes	Yes	5 foot min. setback in R-4 district. 6 foot minimum setback in all other districts
Garden features (e.g., cold frames, hoop houses, greenhouses)	No	No	Yes	Yes	5 foot minimum setback in R-4 district. 6 foot minimum setback in all other districts

Gazebo	Yes	No	Yes	Yes	5 foot. minimum. setback in R-4 district. 6 foot. minimum. setback in all other districts
Hot Tub (and associated equipment)	Yes[3]	No	Yes	Yes	10 foot. minimum. setback in R-1 and R-2 Districts. 7 foot. minimum. setback in all other R districts. Must meet required R district street setback in corner yards.
Parking, open	Yes	Yes	Yes	Yes	See also DGMC Section 28.7.070
Playground equipment & playhouses (excluding equipment located on public parks and playgrounds or on school or day care center playgrounds, tot lots)	Yes[3]	No	Yes	Yes	5 foot. minimum. setback in R-4 district. 6 foot. minimum. setback in all other districts. Must meet required R district street setback in corner yards.
Porch, covered and open on at least 3 sides (see also “deck,” above)	Yes	Yes	Yes	Yes	5 foot. maximum. encroachment in street setback and rear setback (See also DGMC Section 28.14.100(c)). Must meet required district side yard setbacks.
Shed, carport or storage structure	No	No	Yes	Yes	5 foot. minimum. setback in R-4 district. 6 foot. minimum. setback in all other districts.
Sign	Yes	Yes	No	No	See DGMC Article IX

Solar Car Canopy in DT, FT, and Residential Zoning District	No	No	Yes	Yes	5-foot minimum setback in R-4 district. 6-foot minimum setback in all other district.
Solar Car Canopy in Non-Residential Zoning District	Yes	Yes	Yes	Yes	Principal building setbacks apply.
Solar panel and equipment (building-mounted)	Yes	Yes	Yes	Yes	1.5 foot. maximum. encroachment if setback is < 6 foot. 2 foot. maximum. encroachment if setback is ≥ 6 feet.
Solar panel and equipment (ground-mounted)	No	No	Yes	Yes	2 foot. maximum. encroachment in side setback; 10 foot. maximum. encroachment in rear setback. See also DGMC Section 28.6.010(m).
Sport courts & accessory lighting	No	No	Yes	Yes	5 foot. minimum. setback in R-4 district. 6 foot. minimum. setback in all other districts.
Sports equipment	No	No	Yes	Yes	5 foot. minimum. setback in R-4 district. 6 foot. minimum. setback in all other districts.
Steps (for access to building or lot; max. 4 feet above grade)	Yes	Yes	Yes	Yes	No setback in DB, DC, FC and FB districts. 1 foot. minimum. setback
Swimming pool (in-ground & above-ground and associated equipment)	No	No	Yes	Yes	10 foot. minimum. setback in R-1 and R-2 districts. 7 foot. minimum. setback in all other R districts.
Vegetable Garden	Yes	Yes	Yes	Yes	No setback required
Walkway (covered)	No	No	No	No	In residential districts - principal building setbacks

					apply. In nonresidential districts - no side or rear setback required
Wall	Yes	Yes	Yes	Yes	See also DGMC Section 28.10.010
Wall, retaining	Yes	Yes	Yes	Yes	No setback in DB, DC, FC and FB districts. 1 foot minimum setback.
Yard features (e.g., ornamental light standards, anchored lawn furniture and decorations, sundials, statues, bird baths, ponds, sculptures, seat walls, etc.)	Yes	Yes	Yes	Yes	No setback in DB, DC, FC and FB districts. 5 foot minimum setback in R-4 district. 6 foot minimum setback in all other districts
Wheelchair lifts and ramps that meet federal and state accessibility standards	Yes	Yes	Yes	Yes	1 foot minimum setback
Window wells	Yes	Yes	Yes	Yes	1.5 foot maximum encroachment if setback is < 6 feet. 2 foot maximum encroachment if setback is ≥ 6 feet.

* * *

Section 38. That Section 28.14.030(b) of the Zoning Ordinance is hereby amended to read as follows:

Sec 28.14.130 Height.

* * *

(b) Exceptions

(1) Lawfully established parapet walls, chimneys, elevators bulkheads, stair enclosures (without programmable space), equipment penthouses, cooling towers, monuments, water towers, stacks, flag poles, stage towers and scenery lofts, ornamental towers, spires, and necessary mechanical appurtenances are exempt from zoning district height limits and are not included in building height measurements.

(2) Building-mounted solar energy systems may extend up to three feet (3') above the applicable maximum zoning district height limit, provided they do not extend more than five feet (5') above the roof line.

* * *

SECTION 39. That Section 28.15.240 of the Zoning Ordinance is hereby amended to read as follows:

Sec 28.15.240 Words And Terms Beginning With "A".

Accessory Dwelling Unit. A smaller, secondary dwelling unit that complies with the regulations of DGMC Section 28.6.010(f).

SECTION 40. That Section 28.15.050 of the Zoning Ordinance is hereby amended to read as follows:

Section 28.15.050 Words And Terms Beginning With "B".

Building Mounted Wind Energy System (BMWES) – Wind energy conversion systems (such as Horizontal Axis Wind Turbines and Vertical Axis Wind Turbines) that are structurally attached to the roof or side of a building.

SECTION 41. That Section 28.15.060 of the Zoning Ordinance is hereby amended to read as follows:

Section 28.15.060 Words And Terms Beginning With "C".

Caliper. ~~A measurement of the size of a young tree, measured as the diameter of its trunk twelve inches (12") above the root ball. See Figure 15-4.~~The diameter of the trunk of a tree, measured six inches (6") above the ground level, soil line or root flare, as appropriate, or twelve inches (12") above that point where the measurement at six inches (6") is four and one-half inches (4.5") or more. Caliper applies to newly planted trees, existing trees are measured by DBH.

Figure 15-4: ~~Caliper (tree size measurement)~~Reserved

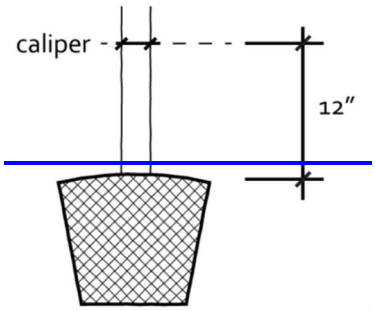

* * *

Correlated Color Temperature (CCT): A measure of the color appearance of a light source expressed in Kelvin (K).

* * *

SECTION 42. That Section 28.15.070 of the Zoning Ordinance is hereby amended to read as follows:

Section 28.15.070 Words And Terms Beginning With "D".

Drip Irrigation System: An irrigation system that saves water by allowing water to drip slowly to the roots of plants, either onto the soil surface or directly onto the root zone. Such systems include, but are not limited to, soaker hoses.

SECTION 43. That Section 28.15.080 of the Zoning Ordinance is hereby amended to read as follows:

Section 28.15.080 Words And Terms Beginning With "E".

Electric Vehicle (EV). Any vehicle that is licensed and registered for operation on public and private highways, roads, and streets; either partially or exclusively, on electrical energy from the grid or an off-board source, that is stored on-board via a battery. “Electric vehicle” includes: (1) battery electric vehicles; and (2) plug-in hybrid electric vehicles.

~~Electric Vehicle (EV) Charging Station. A public or private parking space that is served by battery charging station equipment.~~

Electric Vehicle Charging Station, Private (Restricted-Access). An electric vehicle charging station that is not available for use by the general public. Examples include electric vehicle charging stations that serve residential homeowners or renters, executive parking areas, ~~designated employee parking areas~~ and fleet parking areas.

Electric Vehicle Charging Station, Public. An electric vehicle charging station that is accessible to and available for use by the general public, including employees, visitors and patrons of any establishment.

Electric Vehicle Parking Space. Any parking space that is clearly identified to be used exclusively for the parking of an electric vehicle.

Electric Vehicle Supply Equipment (EVSE). A charging system for an electric vehicle. See the Electric Vehicle Charging Act for the complete definition (765 ILCS 1085/1 et. al).

Electric Vehicle Supply Equipment (EVSE), Level-1. Considered slow charging with voltage range from 0 through 120 volts.

Electric Vehicle Supply Equipment (EVSE), Level-2. Considered medium charging with voltage greater than 120 volts and includes 240 volts.

Electric Vehicle Supply Equipment (EVSE), Level-3 or Direct Current Fast Charging (DCFC). Considered fast or rapid charging with voltage greater than 240 volts.

Electric Vehicle-Capable Space: A parking space with electrical panel capacity reserved and conduit in place to support future installation of a dedicated 40-amp, 240-volt EVSE circuit.

Electric Vehicle Supply Equipment-Installed Space: An EVSE-Ready space with a Level 2 (or higher) electric vehicle supply equipment unit installed and operational within three feet (3') of the parking space.

Electric Vehicle Supply Equipment-Ready Space: An EV-Capable space with conduit, wiring, and a 40-amp, 208- or 240-volt dedicated branch circuit installed and terminating within three (3) feet of the parking space, ready for EVSE installation.

Extended Family Accessory Housing Unit. A secondary dwelling unit (within a detached house) that ~~is~~ was approved as a special use prior to (insert actual date). ~~and that complies with the regulations of DGMC Section 28.6.010(f).~~

SECTION 44. That Section 28.15.110 of the Zoning Ordinance is hereby amended to read as follows:

Section 28.15.110 Words And Terms Beginning With "H".

Horizontal Axis Wind Turbine (HAWT) – A type of wind turbine where the main rotor shaft and electrical generator are positioned horizontally at the top of a tower or pole, with blades that rotate parallel to the ground.

SECTION 45. That Section 28.15.220 of the Zoning Ordinance is hereby amended to read as follows:

Section 28.15.220 Words And Terms Beginning With "S".

Sign, Digital Copy. A sign containing text, graphics, or images that can be changed or updated electronically (on-site or remotely) without manually replacing the physical sign face.

Sign, Marquee. A permanent roof-like structure made of durable, rigid material extending from the entrance of a building over a pedestrian or vehicular thoroughfare. A marquee is supported by the exterior wall of the building and contains a sign board, ~~or~~ changeable copy or a digital copy sign. See Figure 15-20.

Figure 15-20: Marquee Sign



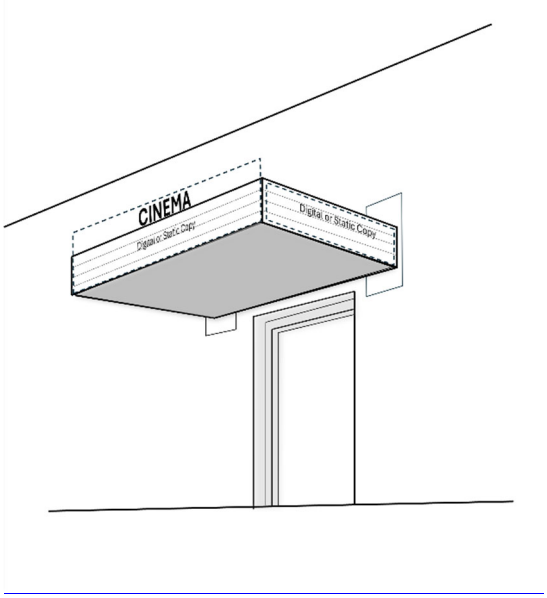

Small Wind Energy System (SWES) – A distributed, on-site power generation setup utilizing wind turbines with a capacity of up to one hundred (100) kilowatts (kW) to power homes or businesses.

* * *

Solar Car Canopy - A permanent, elevated, ground-mounted structure featuring solar panels on its roof, designed to generate renewable energy while shading vehicles from weather elements.

SECTION 46. That Section 28.15.250 of the Zoning Ordinance is hereby amended to read as follows:

Section 28.15.250 Words And Terms Beginning With "V".

Vertical Axis Wind Turbine (VAWT) – A type of wind turbine where the main rotor shaft is positioned vertically at the top of a tower or pole, perpendicular to the ground and wind direction.

SECTION 47. That all ordinances or parts of ordinances in conflict with the provisions of this Ordinance are hereby repealed.

SECTION 48. That this ordinance shall be in full force and effect from and after its passage and publication in the manner provided by law.

_____

By: Mayor

Passed:

Published:

Attest:

_____

By: Village Clerk

Village of Downers Grove

Table 5-1: Allowed Use Tables Based on Zoning Districts

Residential Use

Table 5-1a. Details living accommodations for one (1) or more persons by their specific use types and zoning districts.

Categories	R–1	R–2	R–3	R–4	R–5	R–5A	R–6	B–1	B–2	B–3	DC	DB	DT	O–R	O–R–M	M–1	M–2	INP–1	INP–2	FC	FB	FT	Supplemental Regulations
Detached house	P	P	P	P	P	P	P	–	–	–	–	–	P	–	–	–	–	–	–	–	–	P	
Attached house	P [21]	P [21]	P [21]	P [21]	P	P	P	–	–	–	–	S [20]	P	–	–	–	–	–	–	–	–	P	
Two–unit house	P [21]	P [21]	P [21]	P [21]	P	P	P				–	S [20]	P	–	–	–	–	–	–	–	–	P	
Apartment/Condo	–	–	–	–	–	–	P	P	P	S	S [17]	S	S	–	–	–	–	–	–	S [17]	S	S	
Group Living (except for the following uses)	S	S	S	S	S	S	S	–	–	–	–	–	–	–	–	–	–	S	S	–	–	S	
Group home, small (8–person maximum occupancy)	P	P	P	P	P	P	P	–	–	–	–	–	–	–	–	–	–	P	P	–	–	P	DGMC Section 28.06.050
Group home, large (9 or more occupants)	S	S	S	S	S	S	S	–	–	–	–	–	–	–	–	–	–	S	S	–	–	S	DGMC Section 28.06.050
Nursing home	S	S	S	S	S	S	S	P	P	S	–	–	–	–	–	–	–	–	S	–	S	S	DGMC Section 28.06.050
Sheltered Care	S	S	S	S	S	S	S	P	P	S	–	–	–	–	–	–	–	–	–	–	S	S	DGMC Section 28.06.050

Table 5-1a Notes

- [17] Located on the second floor or above.
- [20] Requires minimum lot area of 1 acre.
- **[21] See Sec 28.2.030 Table 2-2 Note [5].**

Public, Civic and Institutional Use

Table 5-1b. Details public, quasi–public, and private uses that provide unique services that benefit the public at–large by their specific use types and zoning districts.

Categories	R–1	R–2	R–3	R–4	R–5	R–5A	R–6	B–1	B–2	B–3	DC	DB	DT	O–R	O–R–M	M–1	M–2	INP–1	INP–2	FC	FB	FT	Supplemental Regulations
Aircraft Landing Area	–	–	–	–	–	–	–	–	S	S	–	–	–	S	S	S	S	–	S	–	–	–	
Cemetery	–	–	–	–	–	–	–	–	–	–	S [6]	–	–	–	–	–	–	S	S	–	–	–	
College or University	S [1]	S [1]	S [1]	S [1]	S [1]	S [1]	S [1]	–	–	–	S	S	S	S	S	–	–	–	S	S	S	–	
Community Center	S	S	S	S	S	S	S	–	–	–	S	S	S	–	–	–	–	S	P	S	S	–	
Fraternal Organization	S [2]	S [2]	S [2]	S [2]	S [2]	S [2]	S [2]	P	P	P	S	S	–	–	–	–	–	S	S	S	S	–	
Governmental Facility	S [2]	S [2]	S [2]	S [2]	S [2]	S [2]	S [2]	P	P	P	P	P	P	–	–	–	–	P	P	S	S	–	
Hospital	S [3]	S [3]	S [3]	S [3]	S [3]	S [3]	S [3]	–	P	P	–	–	–	–	–	–	–	–	S	–	–	–	
Library	–	–	–	–	–	–	–	–	–	S	S	S	S	S	S	–	–	S	S	S	S	S	
Museum or Cultural Facility	–	–	–	–	–	–	–	–	–	S	S	S	S	S	S	–	–	S	S	P	P	S	
Natural Resource Preservation	P	P	P	P	P	P	P	P	P	P	P	P	P	P	P	P	P	P	P	P	P	P	
Parks and Recreation	S	S	S	S	S	S	S	–	–	–	–	–	–	–	–	–	–	P	P	–	P	P	
Religious Assembly	S	S	S	S	S	S	S	S	P	P	– [6]	– [6]	S	S	S	–	–	S	S	–	–	S	DCMC Section 28.06.120
Safety Service	S	S	S	S	S	S	S	S	P	P	S	S	S	P	P	P	P	P	P	–	–	–	
School	S	S	S	S	S	S	S	–	–	–	–	–	S	–	–	–	–	S	S	–	–	S	
Minor: Utilities and Public Service Facility	P	P	P	P	P	P	P	P	P	P	P	P	P	P	P	P	P	P	P	–	–	–	
Major: Utilities and Public Service Facility	S	S	S	S	S	S	S	S	S	S	S	S	S	S	S	P	P	S	S	–	–	–	
Wireless Telecommunications: Freestanding tower	S	S	S	S	S	S	S	S	S	S	S	S	S	P	P	P	P	S	P	–	–	–	DCMC Section 28.06.170
Wireless Telecommunications: Building or tower–mounted antenna	P	P	P	P	P	P	P	P	P	P	P	P	P	P	P	P	P	P	P	–	–	–	DGMC Section 28.06.170

Table 5-1b Notes

- [1] Requires minimum lot area of 40 acres. Maximum 25% building coverage.
- [2] Requires minimum lot area of 10 acres.
- [3] Requires minimum lot area of 25 acres. Maximum 25% building coverage.
- [6] Special Use only if use was in existence on or prior to June 7, 2005.

Commercial Use

Table 5-1c. Details general commercial use categories by their specific use types and zoning districts.

Categories	R–1	R–2	R–3	R–4	R–5	R–5A	R–6	B–1	B–2	B–3	DC	DB	DT	O–R	O–R–M	M–1	M–2	INP–1	INP–2	FC	FB	FT	Supplemental Regulations
Adult Entertainment Establishment	–	–	–	–	–	–	–	–	–	–	–	–	–	–	P	P	P	–	–	–	–	–	DGMC Section 28.06.020
Animal Service																							
Boarding or shelter	–	–	–	–	–	–	–	–	S	P	–	–	–	–	–	P	P	–	–	P	P	–	
Grooming	–	–	–	–	–	–	–	P	P	P	P	P	P [18]	–	–	P	P	–	–	P	P	–	
Veterinary care	–	–	–	–	–	–	–	–	P	P	S	S	S [18]	–	–	P	P	–	–	P	P	–	DGMC Section 28.06.160
Assembly and Entertainment (except for the following uses)	–	–	–	–	–	–	–	–	–	P	S	S	–	–	–	–	–	–	S	P	P	–	
Auditorium	–	–	–	–	–	–	–	P	P	P	S	S	–	–	–	–	–	–	S	P	P	–	
Cinema	–	–	–	–	–	–	–	P	P	P	S	S	–	–	–	–	–	–	–	P	P	–	
Live Music Entertainment Venue	–	–	–	–	–	–	–	**P**	**P**	**P**	**S**	**S**	–	–	–	–	–	–	–	**P**	**P**	–	
~~**Theater**~~	–	–	–	–	–	–	–	–	~~**P**~~	~~**P**~~	~~**S**~~	~~**S**~~		–	–	–	–	–	~~**S**~~	~~**P**~~	~~**P**~~	–	
Broadcast or Recording Studio	–	–	–	–	–	–	–	–	–	–	–	–	–	–	P	P	P	–	–	P	P	–	
Building Service	–	–	–	–	–	–	–	–	S	P	–	S	–	**P**	**P**	**P**	P	–	–	–	–	–	
Business Support Service	–	–	–	–	–	–	–	P	P	P	P	P	–	**P**	**P**	**P**	P	–	–	P	P	–	
Consumer Maintenance and Repair Service	–	–	–	–	–	–	–	P	P	P	P	P	–	**P**	**P**	P	**P**	–	–	P	P	–	

Categories	R–1	R–2	R–3	R–4	R–5	R–5A	R–6	B–1	B–2	B–3	DC	DB	DT	O–R	O–R–M	M–1	M–2	INP–1	INP–2	FC	FB	FT	Supplemental Regulations
Personal Improvement Service: General Personal Improvement Services	–	–	–	–	–	–	–	P	P	P	P	P	P [18]	P	P	P	P	–	–	P	P	–	
Personal Improvement Service: Health and Fitness Services	–	–	–	–	–	–	–	P	P	P	P	P	P [13]	P	P	–	–	–	–	P	P	–	
Personal Improvement Service: Studio or Instructional Services	–	–	–	–	–	–	–	P	P	P	P	P	P	P	P	S	S	–	–	P	P	–	
Personal Improvement Service: Fortune–telling or Psychic Service	–	–	–	–	–	–	–	P	P	P	P	P	S	–	–	–	–	–	–	P	P	–	
Personal Improvement Service: Massage Therapy	–	–	–	–	–	–	–	–	–	–	–	–	–	–	–	S	S	–	–	P	P	–	DGMC Section 28.06.070
Personal Improvement Service: Tattoo and Body Piercing	–	–	–	–	–	–	–	–	–	–	–	–	–	–	S	S	S	–	–	–	–	–	
Research Service	–	–	–	–	–	–	–	P	P	P	–	–	–	–	–	P	P	–	–	P	P	–	
Day Care Home	P	P	P	P	P	P	P	–	–	–	–	–	P	–	–	–	–	–	–	–	–	P	DGMC Section 28.06.030
Day Care Center	–	–	–	–	S	S	S	P	P	P	–	S	S	P	P	P	P	S	–	–	S	–	DGMC Section 28.06.030
Eating and Drinking Establishment: Restaurant	–	–	–	–	–	–	–	P	P	P	P	P	S	P [7]	P [7]	–	–	–	–	P	P	–	
Eating and Drinking Establishment: Wine and/or Beer Boutique	–	–	–	–	–	–	–	P	P	P	P	P	S [18]	P	P	–	–	–	–	P	P	–	
Eating and Drinking Establishment: Brewing Facility	–	–	–	–	–	–	–	P	P	P	P	P	S [18]	P	P	P	P	–	–	P	P	–	
Financial Service	–	–	–	–	–	–	–	–	P	P	P	P	P [18]	P	P	P	–	–	–	P	P	–	
Funeral or Mortuary Service	–	–	–	–	–	–	–	S	S	S	–	–	–	–	–	–	–	–	–	–	–	–	
Lodging	–	–	–	–	–	–	–	–	P	P	–	S	–	–	P	–	–	–	–	–	–	–	

Categories	R–1	R–2	R–3	R–4	R–5	R–5A	R–6	B–1	B–2	B–3	DC	DB	DT	O–R	O–R–M	M–1	M–2	INP–1	INP–2	FC	FB	FT	Supplemental Regulations
Lodging: Bed and Breakfast	–	–	–	–	–	–	–	–	–	–	–	S	S	–	–	–	–	–	–	–	–	S	
Office: Business and Professional Office	S	S	S	S	S	S	S	P	P	P	P	P	S	P	P	P	P	–	–	P	P	S	DGMC Section 28.06.090
Office: Medical, Dental, and Health Practitioner	–	–	–	–	–	–	S [4]	–	P	P	P/S [8]	P/S [8]	S	P	P	P	P	–	–	P	P	S	
Parking, Non–Accessory	–	–	–	–	–	–	–	–	S	S	–	S	S	S	S	S	S	–	–	–	–	–	
Retail Sales: Convenience Goods	–	–	–	–	–	–	–	P	P	P	P/S [12]	P	P [18]	–	–	–	–	–	–	P	P	–	
Retail Sales: Consumer Shopping Goods	–	–	–	–	–	–	–	P	P	P	P/S [12]	P	P [18]	–	–	–	–	–	–	P	P	–	
Retail Sales: Guns and Firearm Supplies	–	–	–	–	–	–	–	[11]	[11]	[11]	–	–	–	–	–	S	–	–	–	–	–	–	
Retail Sales: Building Supplies and Equipment	–	–	–	–	–	–	–	P	P	P	P/S [12]	P	–	–	–	–	–	–	–	–	–	–	
Self–service Storage Facility	–	–	–	–	–	–	–	–	–	–	–	–	–	–	–	S	S	–	–	–	–	–	DGMC Section 28.06.130
Trade School	–	–	–	–	–	–	–	P	P	P	S	S	–	S	S	S	S	–	–	P	P	–	
Vehicle Sales and Service: Commercial Vehicle Repair and Maintenance	–	–	–	–	–	–	–	–	–	S	–	–	–	–	S	P	–	–	–	–	–	–	
Vehicle Sales and Service: Commercial Vehicle Sales and Rentals	–	–	–	–	–	–	–	–	–	S	–	–	–	–	–	S	–	–	–	–	–	–	
Vehicle Sales and Service: Fueling Station	–	–	–	–	–	–	–	–	S	S	–	–	–	–	S	S	–	–	–	–	–	–	DGMC Section 28.06.040
Vehicle Sales and Service: Personal Vehicle Repair and Maintenance	–	–	–	–	–	–	–	–	S [10]	S	–	–	–	–	S	S	–	–	–	–	–	–	DGMC Section 28.06.100
Vehicle Sales and Service: Personal Vehicle Sales and Rentals	–	–	–	–	–	–	–	–	S [10]	S	–	–	–	–	–	S	–	–	–	–	–	–	
Vehicle Sales and Service: Vehicle Body and Paint	–	–	–	–	–	–	–	–	–	–	–	–	–	–	–	S	–	–	–	–	–	–	

Categories	R–1	R–2	R–3	R–4	R–5	R–5A	R–6	B–1	B–2	B–3	DC	DB	DT	O–R	O–R–M	M–1	M–2	INP–1	INP–2	FC	FB	FT	Supplemental Regulations
Finishing Shop																							
Vehicle Sales and Service: Automobile Dealership Off–site Vehicle Storage	–	–	–	–	–	–	–	–	–	–	–	–	–	–	–	S	–	–	–	–	–	–	DGMC Section 28.06.190

Table 5-1c Notes

- [4] Must be within 150 feet of a B district.
- [7] Requires minimum seating capacity of 125 persons.
- [8] Permitted as of right up to 3,000 square feet (gross floor area); larger requires special use approval.
- [10] Maximum 10,000 square feet (gross floor area).
- [11] Permitted only if ancillary to the following principal uses: sporting goods stores, uniform supply stores and public safety equipment stores.
- [12] Consignment stores and martial arts studios permitted as of right up to 3,000 square feet (gross floor area); larger requires special use approval. Other uses permitted as of right up to 15,000 square feet (gross floor area); larger requires special use approval.
- [13] Barber shops, beauty shops and salons only; must be on ground floor and may not exceed 2,500 square feet floor area.
- [18] Maximum floor area is 2,500 square feet unless located along Main Street where there is no floor area limitation.

Wholesale, Distribution and Storage Use

Table 1-1d. Details general wholesale categories by their specific use types and zoning districts.

Categories	R–1	R–2	R–3	R–4	R–5	R–5A	R–6	B–1	B–2	B–3	DC	DB	DT	O–R	O–R–M	M–1	M–2	INP–1	INP–2	FC	FB	FT	Supplemental Regulations
Equipment and Materials Storage, Outdoor	–	–	–	–	–	–	–	–	–	–	–	–	–	–	–	–	–	–	–	–	–	–	
Trucking and Transportation Terminals	–	–	–	–	–	–	–	–	–	S	–	–	–	–	S	P	P	–	–	–	–	–	
Warehouse	–	–	–	–	–	–	–	–	–	–	–	–	–	S [16]	P	P	P	–	–	–	–	–	
Wholesale Sales and Distribution	–	–	–	–	–	–	–	–	P	P	–	–	–	–	P	P	P	–	–	–	–	–	

Table 5-1d Notes

- [16] See DGMC Section 28.06.180.

Industrial Use

Table 5-1e. Details industrial categories by their specific use types and zoning districts.

Categories	R–1	R–2	R–3	R–4	R–5	R–5A	R–6	B–1	B–2	B–3	DC	DB	DT	O–R	O–R–M	M–1	M–2	INP–1	INP–2	FC	FB	FT	Supplemental Regulations
Artisan Industrial	–	–	–	–	–	–	–	–	–	P	–	S [19]	S [18]	–	P	P	P	–	–	P	P	–	
Limited Industrial	–	–	–	–	–	–	–	–	–	P [11]	–	–	–	–	P	P	P	–	–	–	–	–	
General Industrial	–	–	–	–	–	–	–	–	–	–	–	–	–	–	P	P	P	–	–	–	–	–	
Intensive Industrial	–	–	–	–	–	–	–	–	–	–	–	–	–	–	–	–	S	–	–	–	–	–	
Junk or Salvage Yard	–	–	–	–	–	–	–	–	–	–	–	–	–	–	–	–	–	–	–	–	–	–	

Table 5-1e Notes

- [11] Permitted only if ancillary to the following principal uses: sporting goods stores, uniform supply stores and public safety equipment stores.
- [18] Maximum floor area is 2,500 square feet unless located along Main Street where there is no floor area limitation.
- [19] Use must include on–site retail sales.

Recycling Use

Table 5-1f. Details recycling categories by their specific use types and zoning districts.

Categories	R–1	R–2	R–3	R–4	R–5	R–5A	R–6	B–1	B–2	B–3	DC	DB	DT	O–R	O–R–M	M–1	M–2	INP–1	INP–2	FC	FB	FT	Supplemental Regulations
Recyclable Material Drop–off Facility	–	–	–	–	–	–	–	S	S	S	–	–	–	–	S	S	S	–	–	–	–	–	DGMC Section 28.06.110
Recyclable Material Processing	–	–	–	–	–	–	–	–	–	–	–	–	–	–	–	–	–	–	–	–	–	–	

Agricultural Use

Table 5-1g. Details agricultural categories by their specific use types and zoning districts.

Categories	R–1	R–2	R–3	R–4	R–5	R–5A	R–6	B–1	B–2	B–3	DC	DB	DT	O–R	O–R–M	M–1	M–2	INP–1	INP–2	FC	FB	FT	Supplemental Regulations
Animal Agriculture (except as allowed DGMC Chapter 5)	–	–	–	–	–	–	–	–	–	–	–	–	–	–	–	–	–	–	–	–	–	–	

Categories	R–1	R–2	R–3	R–4	R–5	R–5A	R–6	B–1	B–2	B–3	DC	DB	DT	O–R	O–R–M	M–1	M–2	INP–1	INP–2	FC	FB	FT	Supplemental Regulations
Crop Agriculture	P	P	P	P	P	P	P	–	–	–	–	–	–	–	–	–	–	–	–	–	–	–	
Community Garden	P	P	P	P	P	P	P	P	P	P	P	P	P	P	P	P	P	P	P	–	–	–	

Other Use

Table 5-1h. Details other use categories by their specific use types and zoning districts.

Categories	R–1	R–2	R–3	R–4	R–5	R–5A	R–6	B–1	B–2	B–3	DC	DB	DT	O–R	O–R–M	M–1	M–2	INP–1	INP–2	FC	FB	FT	Supplemental Regulations
Drive–in or Drive–through Facility	–	–	–	–	–	–	–	–	S	S	–	–	–	S [15]	S [21]	S [15]	–	–	–	–	–	–	DGMC Section 28.07.130
Medical Cannabis Cultivation Center	–	–	–	–	–	–	–	–	–	–	–	–	–	–	–	S	S	–	–	–	–	–	DGMC Section 28.05.100
Medical Cannabis Dispensing Organization	–	–	–	–	–	–	–	P	P	P	–	–	–	–	–	P	P	–	–	–	–	–	DGMC Section 28.05.100
Adult Use Cannabis Business Establishments	–	–	–	–	–	–	–	P	P	P	–	–	–	–	–	S	S	–	–	–	–	–	DGMC Section 28.05.100
Adult Use Cannabis Craft Grower	–	–	–	–	–	–	–	–	–	–	–	–	–	–	–	S	S	–	–	–	–	–	DGMC Section 28.05.100
Adult Use Cannabis Cultivation Center	–	–	–	–	–	–	–	–	–	–	–	–	–	–	–	S	S	–	–	–	–	–	DGMC Section 28.05.100
Adult Use Cannabis Dispensing Organization	–	–	–	–	–	–	–	–	–	–	–	–	–	–	–	S	S	–	–	–	–	–	DGMC Section 28.05.100
Adult Use Cannabis Infuser Organization or Infuser	–	–	–	–	–	–	–	–	–	–	–	–	–	–	–	S	S	–	–	–	–	–	DGMC Section 28.05.100
Adult Use Cannabis Processing Organization or Processor	–	–	–	–	–	–	–	–	–	–	–	–	–	–	–	S	S	–	–	–	–	–	DGMC Section 28.05.100
Adult Use Cannabis Transporting Organization or Transporter	–	–	–	–	–	–	–	–	–	–	–	–	–	–	–	S	S	–	–	–	–	–	DGMC Section 28.05.100

Table 5-1h Notes

- [15] Drive through banks and medical facilities only.
- [21] Drive through banks and medical facilities only.

Table 7-1: Minimum Motor Vehicle Parking Ratios

Residential Use.

Table 7-1a. Details minimum parking requirements for residential uses.

Categories	Regulations
Detached house	2 spaces per dwelling unit
Attached house	2 spaces per dwelling unit
Two–unit house	2 spaces per dwelling unit
Apartment/Condo	2 spaces per dwelling unit
Apartment/Condo: DB, DC, FC and FB zoning districts	1.4 spaces per dwelling unit
Apartment/Condo: For Persons 62 or older	0.6 spaces per dwelling unit
Apartment/Condo: For Persons 62 or older and offering on-site assisted living services	0.4 spaces per dwelling unit
Apartment/Condo: Inclusive Dwelling Units provided for in the F Zoning Districts	1 space per Inclusive Dwelling Unit
Group Living	0.5 spaces per bed

Categories	Regulations
Group Home, small (8–person maximum occupancy)	0.5 spaces per bed
Group Home, large (9 or more occupants)	0.5 spaces per bed
Nursing home	0.25 spaces per bed
Sheltered Care	0.25 spaces per bed

Public, Civic and Institutional Use.

Table 7-1b. Details minimum parking requirements for public, civic and instiuttional uses.

Categories	Regulations
Aircraft Landing Area	DGMC Section 28.7.040(g)
Cemetery	DGMC Section 28.7.040(g)
College or University	DGMC Section 28.7.040(g)
Community Center	3 spaces per 1,000 square feet of gross floor area
Fraternal Organization	3 spaces per 1,000 square feet of gross floor area
Governmental Facility	DGMC Section 28.7.040(g)
Hospital	DGMC Section 28.7.040(g)
Library	2.5 spaces per 1,000 square feet of gross floor area

Categories	Regulations
Museum or Cultural Facility	2 spaces per 1,000 square feet
Natural Resource Preservation	None
Parks and Recreation: Park	DGMC Section 28.7.040(g)
Parks and Recreation: Swimming Pool	DGMC Section 28.7.040(g)
Parks and Recreation: Tennis Court	DGMC Section 28.7.040(g)
Religious Assembly (existing as of 01-14-1991 and located within 1,000 feet of DC or DB zoning district)	1 space per 8 occupants (maximum capacity)
Religious Assembly (other)	1 space per 4 occupants (maximum capacity)
Safety Service	DGMC Section 28.7.040(g)
School: Elementary and Junior High	DGMC Section 28.7.040(g)
School: Senior High	DGMC Section 28.7.040(g)
Minor: Utilities and Public Service Facility	None
Major: Utilities and Public Service Facility	DGMC Section 28.7.040(g)
Wireless Telecommunications: Freestanding tower	None
Wireless Telecommunications: Building or tower–mounted antenna	None

Commercial Use.

Table 7-1c. Details minimum parking requirements for commercial uses.

Categories	Regulations
Adult Entertainment Establishment	DGMC Section 28.7.040(g)
Animal Service: Boarding or shelter	3 spaces per 1,000 square feet of gross floor area
Animal Service: Grooming	3 spaces per 1,000 square feet of gross floor area
Animal Service: Veterinary care	3 spaces per 1,000 square feet of gross floor area
Assembly and Entertainment	0.20 spaces per person, based on maximum occupancy
Assembly and Entertainment: Auditorium	0.20 spaces per person, based on maximum occupancy
Assembly and Entertainment: Cinema	0.20 spaces per person, based on maximum occupancy
Assembly and Entertainment: Live Music Entertainment Venue	0.20 spaces per person, based on maximum occupancy
Broadcast or Recording Studio	0.20 spaces per person, based on maximum occupancy
Building Service	1.17 spaces per 1,000 square feet of gross floor area
Business Support Service	2.5 spaces per 1,000 square feet of gross floor area
Consumer Maintenance and Repair Service	2.5 spaces per 1,000 square feet of gross floor area

Categories	Regulations
Personal Improvement Service: General Personal Improvement Services	3.5 spaces per 1,000 square feet of gross floor area
Personal Improvement Service: Health and Fitness Services	3.5 spaces per 1,000 square feet of gross floor area
Personal Improvement Service: Studio or Instructional Services	3.5 spaces per 1,000 square feet of gross floor area
Personal Improvement Service: Fortune-telling or psychic services	3.5 spaces per 1,000 square feet of gross floor area
Personal Improvement Service: Massage Therapy	3.5 spaces per 1,000 square feet of gross floor area
Personal Improvement Service: Tattoo and body piercing establishments	3.5 spaces per 1,000 square feet of gross floor area
Research Service	1 space per 1,000 square feet of gross floor area
Day Care: Day Care Home	None
Day Care: Day Care Center	2 spaces per 1,000 square feet of gross floor area, plus 1 drop-off or pick-up space per 1,000 square feet of gross floor area (not to exceed a maximum of 10)
Eating and Drinking Establishment: Restaurant	10 spaces per 1,000 square feet of gross floor area
Eating and Drinking Establishment: Wine and/or Beer Boutique	3 spaces per 1,000 square feet of gross floor area
Eating and Drinking Establishment: Brewing Facility	5 spaces per 1,000 square feet of gross floor area
Eating and Drinking Establishment: Carry-Out restaurant	3 spaces per 1,000 square feet of gross floor area
Financial Service	2.5 spaces per 1,000 square feet of gross floor area

Categories	Regulations
Funeral or Mortuary Service	4 spaces per 1,000 square feet of gross floor area
Lodging	1 space per guestroom plus parking required by this section for restaurants, bars and other accessory uses
Lodging: Bed and Breakfast	1 space per guestroom
Office: Business and Professional Office	2.5 spaces per 1,000 square feet of gross floor area
Office: Medical, Dental, and Health Practitioner	3.3 spaces per 1,000 square feet of gross floor area
Parking, Non-Accessory	None
Retail Sales: Convenience Goods	3 spaces per 1,000 square feet of gross floor area
Retail Sales: Consumer Shopping Goods	3 spaces per 1,000 square feet of gross floor area
Retail Sales: Guns and Firearm Supplies	3 spaces per 1,000 square feet of gross floor area
Retail Sales: Building Supplies and Equipment	3 spaces per 1,000 square feet of gross floor area
Retail Sales: Multi-Tenant Shopping Center	3 spaces per 1,000 square feet of gross floor area
Retail Sales: Furniture	1.67 spaces per 1,000 square feet of gross floor area.
Self–service Storage Facility	0.1 space per storage unit
Trade School	1 space per 4 occupants (maximum capacity)

Categories	Regulations
Vehicle Sales and Service: Commercial Vehicle Repair and Maintenance	1 per service bay plus stacking spaces per DGMC Section 28.7.130
Vehicle Sales and Service: Commercial Vehicle Sales and Rentals	1.67 spaces per 1,000 square feet of showroom area
Vehicle Sales and Service: Fueling Station	1 space per four pumps, plus 3 spaces per 1,000 square feet of gross floor area for retail uses
Vehicle Sales and Service: Personal Vehicle Repair and Maintenance	1 per service bay plus stacking per DGMC Section 28.7.130
Vehicle Sales and Service: Personal Vehicle Sales	1.67 spaces per 1,000 square feet of showroom gross floor area
Vehicle Sales and Service: Personal Vehicle Rental	2.5 spaces per 1,000 square feet of gross floor area, plus 1 space per rental vehicle
Vehicle Sales and Service: Vehicle Body and Paint Finishing Shop	1 per service bay, plus stacking spaces per DGMC Section 28.7.130
Vehicle Sales and Service: Automobile dealership Off-Site Vehicle Storage	DGMC Section 28.7.040(g)

Wholesale, Distribution and Storage Use.

Table 7-1d. Details minimum parking requirements for wholesale, distribution and storage uses.

Categories	Regulations
Equipment and Materials Storage, Outdoor	0.67 spaces per 1,000 square feet of gross floor area

Categories	Regulations
Trucking and Transportation Terminals	0.67 spaces per 1,000 square feet of gross floor area
Warehouse	0.67 spaces per 1,000 square feet of gross floor area
Wholesale Sales and Distribution	0.67 spaces per 1,000 square feet of gross floor area

Industrial Use.

Table 7-1e. Details minimum parking requirements for industrial uses.

Categories	Regulations
Artisan Industrial	1 space per 1,000 square feet of gross floor area
Limited Industrial	1 space per 1,000 square feet of gross floor area
General Industrial	1 space per 1,000 square feet of gross floor area
Intensive Industrial	1 space per 1,000 square feet of gross floor area
Junk or Salvage Yard	DGMC Section 28.7.040(g)

Recycling Use.

Table 7-1f. Details minimum parking requirements for recycling uses.

Categories	Regulations
Recyclable Material Drop–off Facility	DGMC Section 28.7.040(g)
Recyclable Material Processing	DGMC Section 28.7.040(g)

Agricultural Use.

Table 7-1g. Details minimum parking requirements for agriculture uses.

Categories	Regulations
Animal Agriculture	None
Crop Agriculture	DGMC Section 28.7.040(g)
Community Garden	None

Other Use.

Table 7-1h. Details minimum parking requirements for other uses.

Categories	Regulations
Drive–in or Drive–through Facility	Stacking spaces per DGMC Section 28.7.130
Medical Cannabis Cultivation Center	1 space per 1,000 square feet of gross floor area
Medical Cannabis Dispensing Organization	3 spaces per 1,000 square feet of gross floor area
Adult Use Cannabis Business Establishments	1 space per 1,000 square feet of gross floor area
Adult Use Cannabis Craft Grower	3 spaces per 1,000 square feet of gross floor area for dispensary portion of the business plus 1 space per 1,000 square feet of non-dispensary areas of business
Adult Use Cannabis Cultivation Center	1 space per 1,000 square feet of gross floor area
Adult Use Cannabis Dispensing Organization	3 spaces per 1,000 square feet of gross floor area
Adult Use Cannabis Infuser Organization or Infuser	1 space per 1,000 square feet of gross floor area
Adult Use Cannabis Processing Organization or Processor	1 space per 1,000 square feet of gross floor area
Adult Use Cannabis Transporting Organization or Transporter	1 space per 1,000 square feet of gross floor area

DRAFT

26-PZC-0002:

The petitioner is seeking approval of text amendments to various articles within Chapter 28 (Zoning Ordinance) of the Municipal Code related to environmental sustainability, parking, digital signs, accessory dwelling units, two-unit and attached housing, land uses and minor clarifications and modifications. Village of Downers Grove, Petitioner.

Stan Popovich, AICP Director of Community Development, presented on the approval of text amendments within the Zoning Ordinance. He went over all the provisions discussed and/or added during various text amendment meetings and the summary of the proposed text amendments on the environmental sustainability, parking, digital signs, ADUs, two-unit and attached housing, land use topics, as well as minor clarifications and modifications. He also went over the schedule and asked for recommendation.

Chairman Rickard asked for questions for the petitioner.

Chairman Rickard inquired if the duplex or attached housing needed to be on an arterial, what dictates if a corner lot is on an arterial. Mr. Popovich answered if they abut the right-of-way and if they have direct access to the arterial right-of-way, even if the mailing address is a non-arterial street.

Commissioner Lincoln made an inquiry about the shared parking table provided in the draft. Mr. Zawila responded staff has used the shared parking table since the 2014 ordinance they adopted and use when there is a mixture of uses.

Commissioner Lincoln refereed to a typo on PDF document 89. Mr. Popovich stated they will correct that.

Commissioner Eberhardt voiced in regard to the digital signs, they talked about them being 100 feet from a building and where they would measure from if there was not a building there. She still felt they should just go to property line to measure, as something could change later on. Mr. Popovich clarified they could measure to the setback line.

Commissioner Eberhardt voiced concern if someone had an existing house but adds an addition later, which would change the 100 feet measurement to the sign and enjoyment of their yard, so she felt it made more sense to go to just the setback and not worry about a structure on the property.

DRAFT

Commissioner Patel shared he had a change of heart on the regulation of increasing in-home daycares from 8 to 12 children, as he did not see the need or the demand in increasing that. He was in support of all the other items.

Commissioner Barry agreed with Commissioner Patel on the daycare increase and wondered why they needed to do that. Mr. Popovich answered there was not a big outreach to change those regulations, and discussions about this arose from a previous case discussion. Mr. Zawila added they also wanted to bring it closer to alignment with state regulations.

Commissioner Eberhardt did not understand why it was not a special use to open a home child daycare, as it can affect the enjoyment of someone's property and yard. Mr. Zawila stated it has never been a special use there and the administrative nature to track that would be very difficult with the different licensing requirements, which are handled by the state.

Chairman Rickard agreed there is an impact on the neighborhood with daycares.

Commissioner Lincoln noted the impact might pertain to whether or not the people running it actually follow the codes laid out, as with any facility.

Commissioner Barry stated when a daycare is well-managed and has the right amount of kids, it is an asset to the community. He did not know if they should punish everybody for the sins for one.

Commissioner Lincoln wondered if they are going to reduce parking requirements in regard to EV parking and reduced requirements if using level 3 chargers. He asked if there was a different way they could incentivize that and lower the parking requirements across the board so they do not need to have so much concrete if it is not needed. Mr. Popovich responded that is one of the only tools they have to incentivize those. He added they have reduced some parking requirements in terms of ratios. Mr. Zawila noted they also have a maximum cap now on parking that goes onto a site, with the idea to keep or add open space to a site.

Commissioner Lincoln asked what the original reason was for putting in expirations for special use permits. Mr. Popovich answered when they are standalone, like a drive-thru restaurant, they want that to be built so they give a year to at least pull a permit for the project. He said the expiration is only for special uses associated with a PUD. He added they usually extend those when someone asks for an extension.

Chairman Rickard asked for public testimony.

DRAFT

Robin Tryloff, Prince Pond resident, had questions about the two-unit and attached housing plans, as she felt they deserved clear answers on the Village's intent with that. She asked how the Village will ensure middle housing development aligns with the plan, how middle housing supports the Comprehensive Plan's guidance that multifamily housing should serve as transitional land use between single family neighborhoods and high intensity commercial or industrial areas, what the core purpose is of the middle housing proposal, how the Village will ensure that middle housing provides housing that is attainable, and why the Village is not requiring that a percentage of units in new condominiums and apartments be affordable. She reiterated her support for truly affordable housing, which is housing that costs no more than 30% of a household's gross income. She believed their community can and should pursue thoughtful ways to expand attainable and affordable housing opportunities.

John LaDone, resident, stated he spoke previously about changing the R-1 to R-4 along the major and minor roads throughout town. He said if someone was to acquire property just south of North High School to Prairie, which is currently R-1 to R-4, they could put in a whole block of row houses or duplexes that would substantially change the character of the area. He stated changing that zoning to R-5 was a substantially change the character of those neighborhoods, so he recommended telling the Village Council not to do that, and if it does still change to R-5, all those property owners within 250 feet of those homes need to be notified.

Janet Winningham, resident, agreed with the previous speakers. She said if the density requirements are increased and ADUs go in, she felt they needed to increase the height of allowable fences along the lines of the denser properties for privacy reasons. She added in regard to the setback variance for exits and steps, she felt the steps and stairs should be in the front and the back to allow side yards to have room and not be completely crowded out.

Chairman Rickard asked for the staff report. There was no further staff report.

Chairman Rickard asked for questions for staff.

Chairman Rickard asked for clarification that the bulk requirements of the zoning district do not change, as just the type of housing allowed changed, and those in R-5 would still have to comply with the bulk regulations in R-5. Mr. Popovich answered that is correct. He said the setbacks and heights are not proposed to change, just the number of potential of units that could be put in.

Commissioner Barry asked if they were proposing any changing of the zoning along the arterial roads. Mr. Popovich responded there is no proposed changes to the zoning along the arterial roads. He noted if someone is in R-5 or R-6 zoned property currently, there are provisions to allow duplexes and attached homes right now, but the change is that currently R-5 zoning lots

DRAFT

have to be bigger and larger to provide for a duplex but the proposed amendments would allow a duplex to be built on the same size lot as a single family home.

Mr. Popovich showed the arterial streets allowed. He explained they would have to have direct access via a driveway out to the property, as well as the neighbors.

Chairman Rickard asked for Commission deliberation.

Chairman Rickard noted a few of the commissioners seemed to be in favor of the daycare number going to 8, plus resident children.

Commissioner Patel agreed, as he did not understand the context or data points to move to 12 children, and felt that would be a significant change for the community. Mr. Popovich clarified it is currently 8, excluding the children in the house, and the proposal is 12, including children in the house.

Chairman Rickard stated there is less impact with outside traffic with only having 8 coming and going.

Commissioner Eberhardt was in agreement.

Commissioner Lincoln strongly disagreed, as he felt they had a good compromise and answered a lot of these questions when they discussed it at a previous meeting. He said they had a whole group of people that talked about reasons why to increase the number. He said if there are issues with certain daycares not following the rules, that is for code enforcement to deal with. He voiced daycare is an affordable option for people, especially those complaining about the cost of living. He noted the original proposal was for 16 kids and they compromised to 12.

Chairman Rickard agreed there was a huge need for it, but he still liked having 8, plus resident kids.

Commissioner Eberhardt asked if they were in consensus on her recommendation for the measuring point being the setback and not the building or property line in regard to the digital signs. The Commission was in agreement.

Commissioner Wolf voiced that she was not a fan of digital signage in general, but understood they have been thoughtful in developing their recommendations. She was comfortable with going to the 12 for daycare, as the concerns they heard from residents can be monitored and managed in other ways. She also felt staff was thoughtful in regard to allowing larger family homes.

DRAFT

Commissioner Lincoln shared he lives behind an arterial street, and it would not bother him if the houses behind him became duplexes.

Commissioner Eberhardt stated those are good alternatives to building multistory apartment buildings and it seems to go with the neighborhood. However, she had some reservations on adding more traffic.

With respect to File 26-PZC-0002, based on the petitioner's submittal, staff report, and the testimony presented, it is found that the petitioner has met the standards of approval for a Zoning Text Amendment, as required by the Village of Downers Grove Zoning Ordinance and is in the public interest. Therefore, Commissioner Patel made a motion that the Planning and Zoning Commission recommend to the Village Council approval of 26-PZC-0002 regarding the proposed amendments to Articles 2, 3, 4, 5, 6, 7, 8, 9, 10, 11, 12, 14 and 15 of the Zoning Ordinance. In addition, they asked to staff to carry forward with the Village Council regarding two items, the evaluation of daycare regulations and setback regulations for digital signage.

The motion seconded by Commissioner Eberhardt.

Aye: Barry, Eberhardt, Lincoln, Patel, Wolf, Chairman Rickard

Nay: None

The Motion Passed 6-0.

Mr. Zawila stated this is scheduled for Village Council on December 1, 2026. Mr. Popovich thanked the Planning and Zoning Commission for going through the Zoning Ordinance Amendments with them.